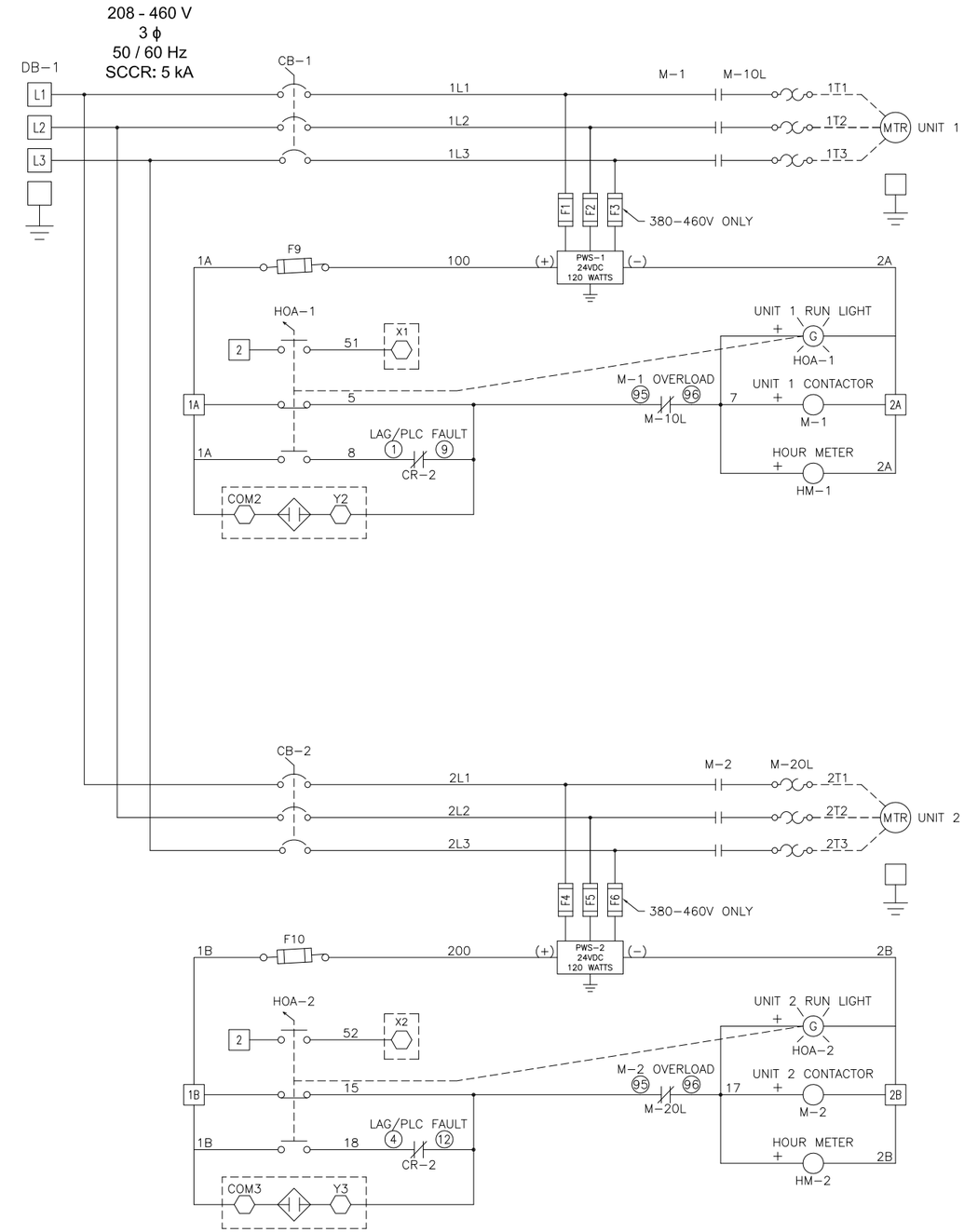

Notes:
1. MAIN DISCONNECT PROVIDED BY OTHER.
2. FIELD WIRING TO BE COPPER RATED FOR 75°C MINIMUM.
3. -- -- -- -- INDICATES FIELD WIRING OUTSIDE OF CABINET.
4. THE AMPACITY OF CONDUCTORS SUPPLYING THE CONTROL PANEL TO BE ROUNDED UP TO THE NEXT SIZE LARGER STANDARD WIRE GAUGE.
5. MOP VALUES TO BE ROUNDED DOWN TO THE NEAREST STANDARD RATING OF THE OVERCURRENT PROTECTION DEVICE.
6. SHORT CIRCUIT CURRENT RATING (SCCR): 5 kA

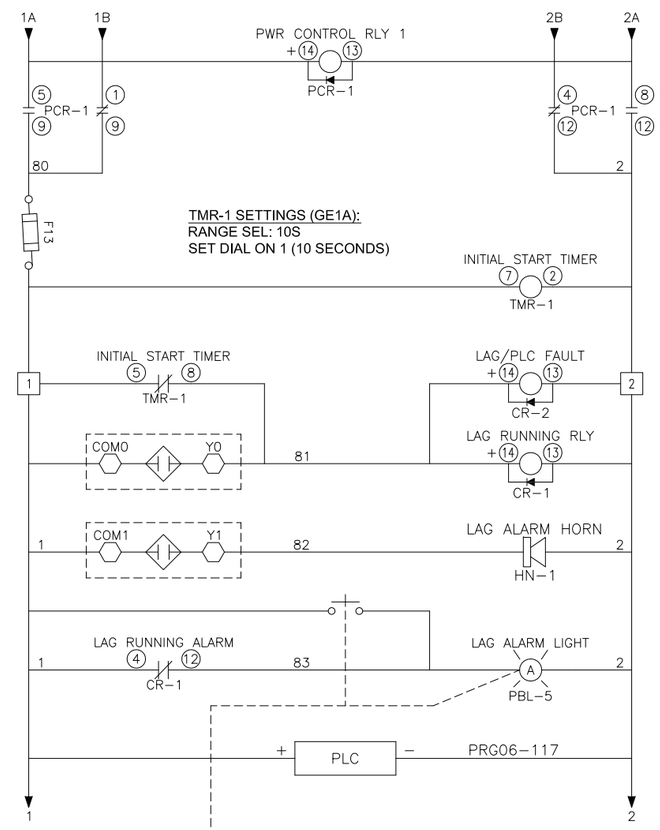

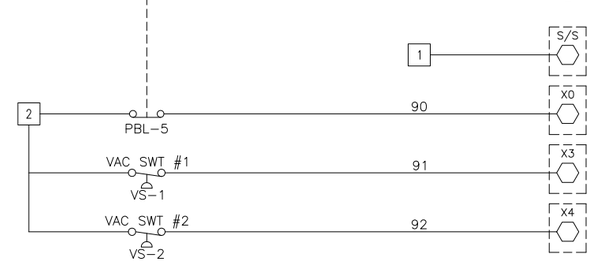

AUXILIARY CONTACTS

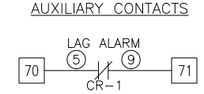

NOTE:
AUXILIARY CONTACTS 70-71 ARE "CLASS 1 CONTROL CIRCUITS.
USE CLASS 1 CONDUCTORS."

AUX CONTACTS ARE RATED
10A @ 120VAC UNLESS OTHERWISE NOTED.

AUX CONTACTS CLOSED DURING NORMAL OPERATION.

MINIMUM CIRCUIT AMPACITY (MCA)

SYSTEM HP	208 V	230 V	380/400 V	460 V
1.5 HP	16.6 AMPS	15.1 AMPS	8.7 AMPS	7.8 AMPS
2 HP	18.6 AMPS	16.9 AMPS	10.9 AMPS	8.7 AMPS
3 HP	25.6 AMPS	23.2 AMPS	15.0 AMPS	11.8 AMPS
5 HP	39.3 AMPS	35.8 AMPS	23.1 AMPS	18.1 AMPS

MAXIMUM OVERCURRENT PROTECTION (MOP)

SYSTEM HP	208 V	230 V	380/400 V	460 V
1.5 HP	21.5 AMPS	19.5 AMPS	10.7 AMPS	9.8 AMPS
2 HP	24.4 AMPS	22.1 AMPS	14.0 AMPS	11.1 AMPS
3 HP	34.5 AMPS	31.2 AMPS	19.8 AMPS	15.6 AMPS
5 HP	54.3 AMPS	49.4 AMPS	31.5 AMPS	24.7 AMPS

DUPLEX SYSTEM FULL LOAD AMPERES

SYSTEM HP	208 V	230 V	380V/50Hz	460 V
1.5 HP	11.8 AMPS	11.3 AMPS	7.2 AMPS	6.2 AMPS
2 HP	15.6 AMPS	14.2 AMPS	7.6 AMPS	7.4 AMPS
3 HP	19.2 AMPS	17.7 AMPS	9.2 AMPS	9.1 AMPS
5 HP	34.2 AMPS	31.3 AMPS	17.6 AMPS	15.9 AMPS

INDIVIDUAL FULL LOAD AMPERES

SYSTEM HP	208 V	230 V	380V/50Hz	460 V
1.5 HP	5.2 AMPS	5.0 AMPS	3.1 AMPS	2.7 AMPS
2 HP	7.1 AMPS	6.5 AMPS	3.3 AMPS	3.3 AMPS
3 HP	8.9 AMPS	8.2 AMPS	4.1 AMPS	4.1 AMPS
5 HP	16.4 AMPS	15.0 AMPS	8.3 AMPS	7.5 AMPS

FUSE SELECTION CHART (MAX FUSE SIZES SHOWN)

FUSES	208 V	230 V	380 V	460 V
F1/F2/F4/F5	6 AMP	6 AMP	6 AMP	6 AMP
F3/F6	---	---	6 AMP	6 AMP
F9/F10	2.5 AMP	2.5 AMP	2.5 AMP	2.5 AMP
F13	0.7 AMP	0.7 AMP	0.7 AMP	0.7 AMP

F1-F6 ARE LITTELFUSE KLDR 600V TYPE
F9-F10/F13 ARE LITTELFUSE 2AG 250V TYPE

OPERATION:

DURING NORMAL OPERATION THE HOA SWITCHES SHOULD BE IN THE AUTO POSITION. THE PLC WILL SIGNAL THE LEAD PUMP TO START WHEN VS-1 CLOSES WITH FALLING VACUUM LEVEL, BUT THE SIGNAL TO STOP IS BASED ON THE LENGTH OF TIME THE VACUUM SYSTEM WAS NOT RUNNING. THE PLC DETERMINES THE MINIMUM RUNNING TIME OF A PUMP ONCE IT STOPS. IF THE VACUUM SYSTEM IS STOPPED FOR A LONG PERIOD OF TIME, THEN THE MINIMUM RUN TIME AFTER A RESTART WILL BE SHORT. IF THE VACUUM SYSTEM IS OFF FOR A SHORT PERIOD OF TIME, THEN THE MINIMUM RUNNING TIME WILL BE LONGER UP TO A MAXIMUM OF 15 MINUTES AFTER VS-1 OPENS (SEE CHART). AFTER VS-1 OPENS AND THE MINIMUM RUN TIMER HAS EXPIRED, THE PUMP THAT IS RUNNING WILL TURN OFF. WHEN VS-1 CLOSES AGAIN THE PLC WILL SEQUENCE THE LEAD ROLE TO THE NEXT PUMP. IF DURING OPERATION THE SECOND PUMP IS REQUIRED TO COME ON, THE PLC WILL TURN ON THE "LAG ALARM".

HAND OPERATION; (EMERGENCY/TROUBLE SHOOTING MODE ONLY)

PUMPS WITH THE HOA SWITCH IN THE HAND POSITION WILL START AND RUN CONTINUOUSLY.

PLC FAULT; IF A PLC FAULT OCCURS, VACUUM PUMPS WILL START AND RUN CONTINUOUSLY. VACUUM PUMPS CAN OPERATE IN THIS CONDITION UNTIL PLC FAULT IS REPAIRED.

MINIMUM RUN TIME VALUES

SYSTEM OFF TIME (MIN:SEC)	NEXT MINIMUM RUN TIME VALUE (MIN)
0:00 TO 1:59	15
2:00 TO 3:59	13
4:00 TO 5:59	11
6:00 TO 7:59	9
8:00 TO 9:59	7
10 OR LONGER	5

VACUUM SWITCH SETTINGS

ALTITUDE	VS-1	VS-2	RELIEF VALVE SETTING
0-1000'	19-23"hg	17-22"hg	25"hg
1001'-2000'	18-22"hg	16-21"hg	24"hg
2001'-3000'	17-21"hg	15-20"hg	23"hg
3001'-4000'	16-20"hg	14-19"hg	22"hg
>4000'	CONSULT FACTORY		

Revised: DAG	Date: 03/31/17	Drawn: JWO	Date: 07/08/15
BeaconMedaes	This drawing and the information contained thereon remain the property of BeaconMedaes and may not be used for other than the purpose for which it is loaned without the expressed written permission from BeaconMedaes Engineering.	Scale: NTS	D
Description: DWG WIRING CONTROL DX DRY 1-5HP BASIC 208-460/3/50-60		Part Number: 4107 8554 02	
		DN: HOP 170338 00	Rev: 03
		Sheet 1 of 1	DO NOT SCALE THIS DOCUMENT