Notes:

1. DISCHARGE MUFFLER WILL BE SHIPPED LOOSE.
2. SYSTEM WEIGHT: 3,178 LBS.
3. ☒ INDICATES LIFTING POINT.
4. ⊕ DENOTES CENTER OF GRAVITY.

SYSTEM CONNECTIONS	
ID	DESCRIPTION
I	INLET LOCATION
D	DISCHARGE LOCATION
C	CONDENSATE DRAIN LOCATION
T	TANK DRAIN LOCATION

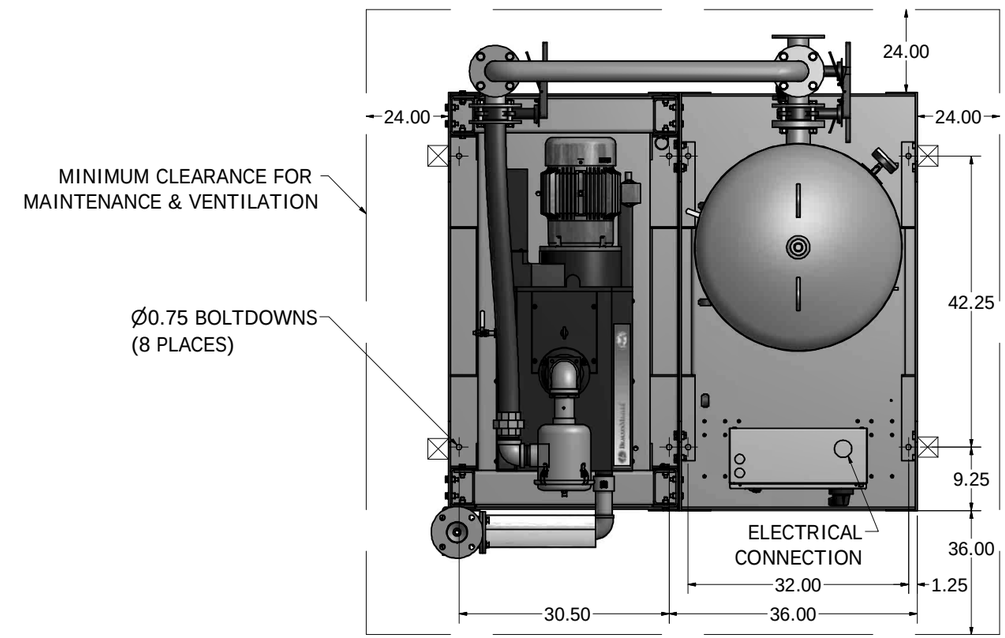

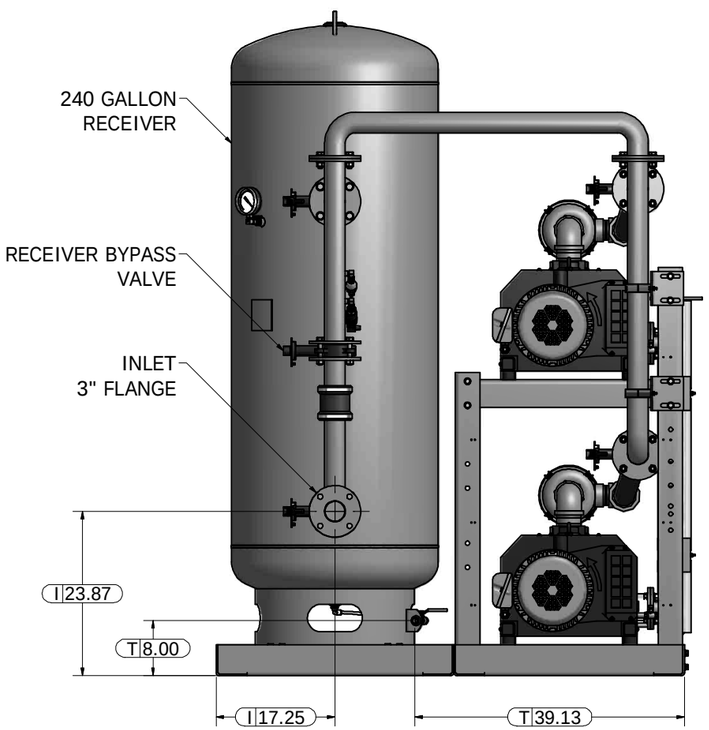

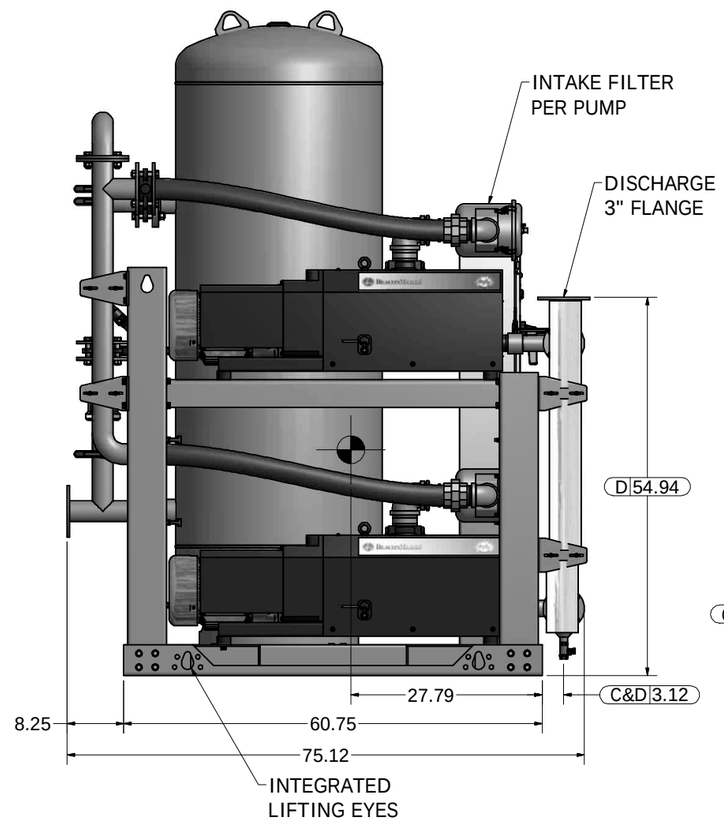

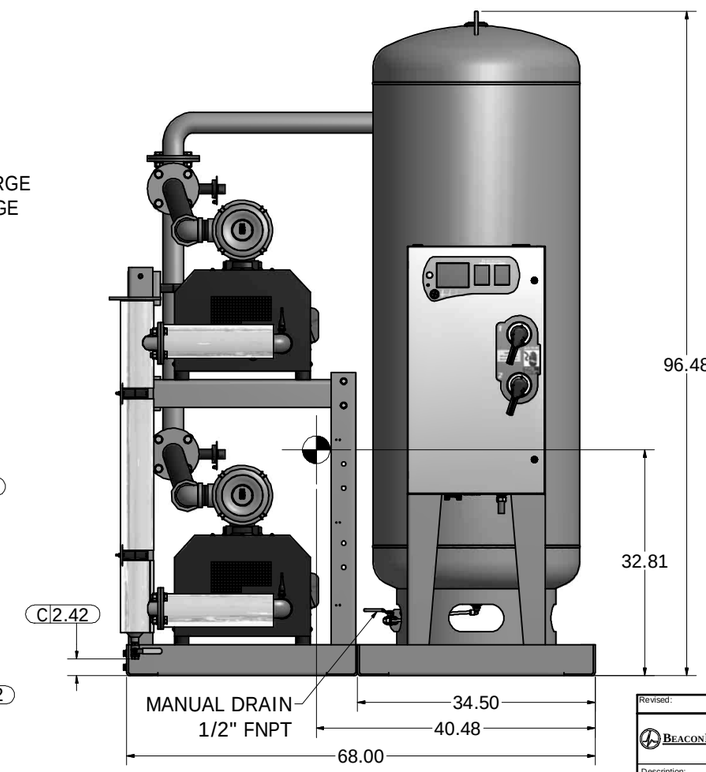

Revised:	Date:	Drawn: GTM	Date: 4/11/2012
BeaconMedaes	This drawing and the information contained thereon remain the property of BeaconMedaes and may not be used for other than the purpose for which it is loaned without the expressed written permission from BeaconMedaes Engineering.	Scale: 1/11	D
Description: GENERAL ASSEMBLY 10HP DX CLAW VAC SPC 240G RECEIVER STANDARD AND O2 ASSURED		Part Number: 4107 8538 55	
		DN: HOP120412	Rev. 00
		Sheet 1 of 1	DO NOT SCALE THIS DOCUMENT