NOTES:
1. DISCHARGE MUFFLERS WILL BE SHIPPED LOOSE.

2. DX MODULE WEIGHT: 2,291 LBS.
   SX MODULE WEIGHT: 2,291 LBS.
   (INCLUDES FUTURE EXPANSION PUMP)

   240G TANK WEIGHT: 733 LBS
   CONTROL PANEL WEIGHT: 272 LBS.

3. ☒ INDICATES LIFTING POINT.

4. ⊕ DENOTES CENTER OF GRAVITY.

SYSTEM CONNECTIONS	
ID	DESCRIPTION
I	INLET LOCATION
D	DISCHARGE LOCATION
C	CONDENSATE DRAIN LOCATION
T	TANK DRAIN LOCATION

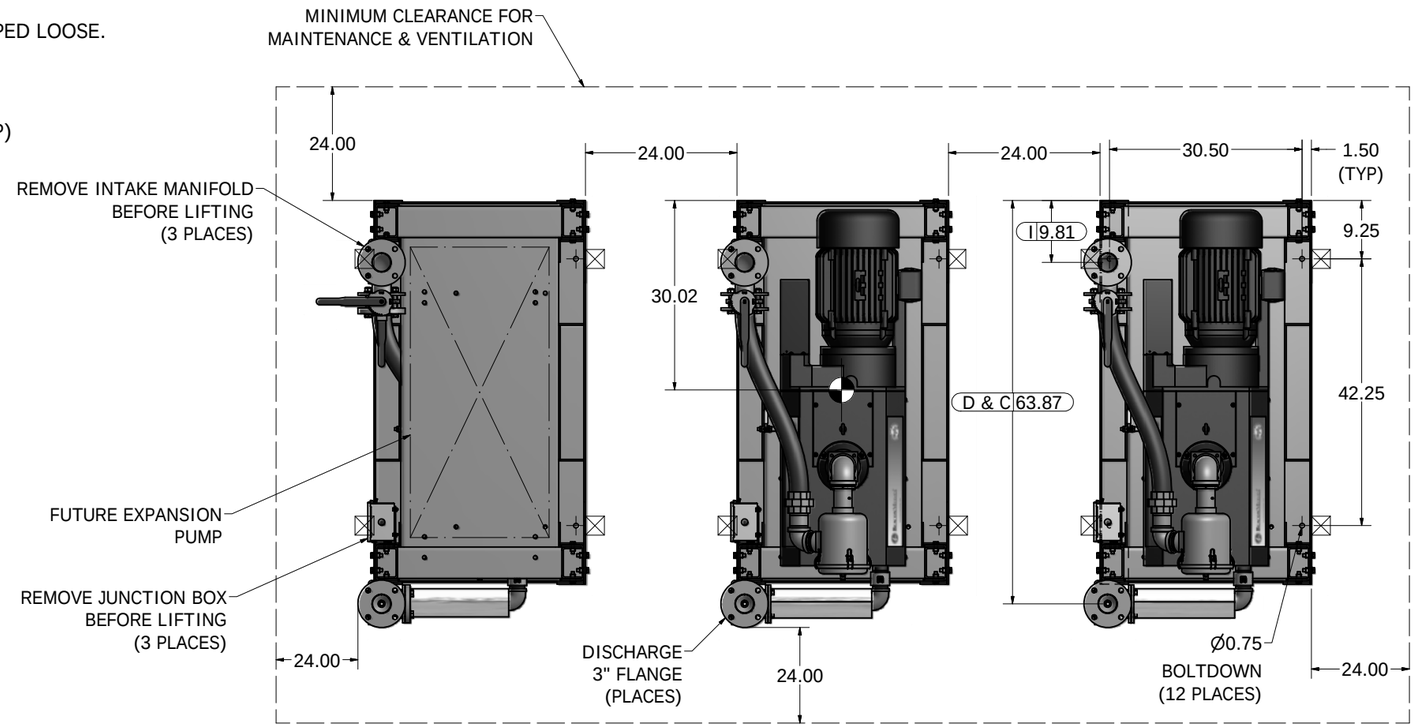

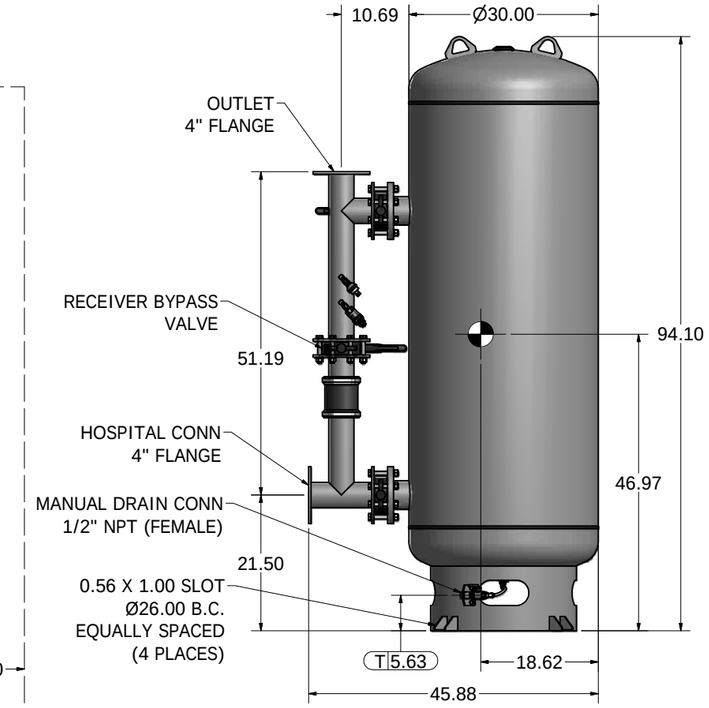

240 GAL VACUUM RECEIVER
4" FLANGED CONNECTIONS
(SCALE 1:12)

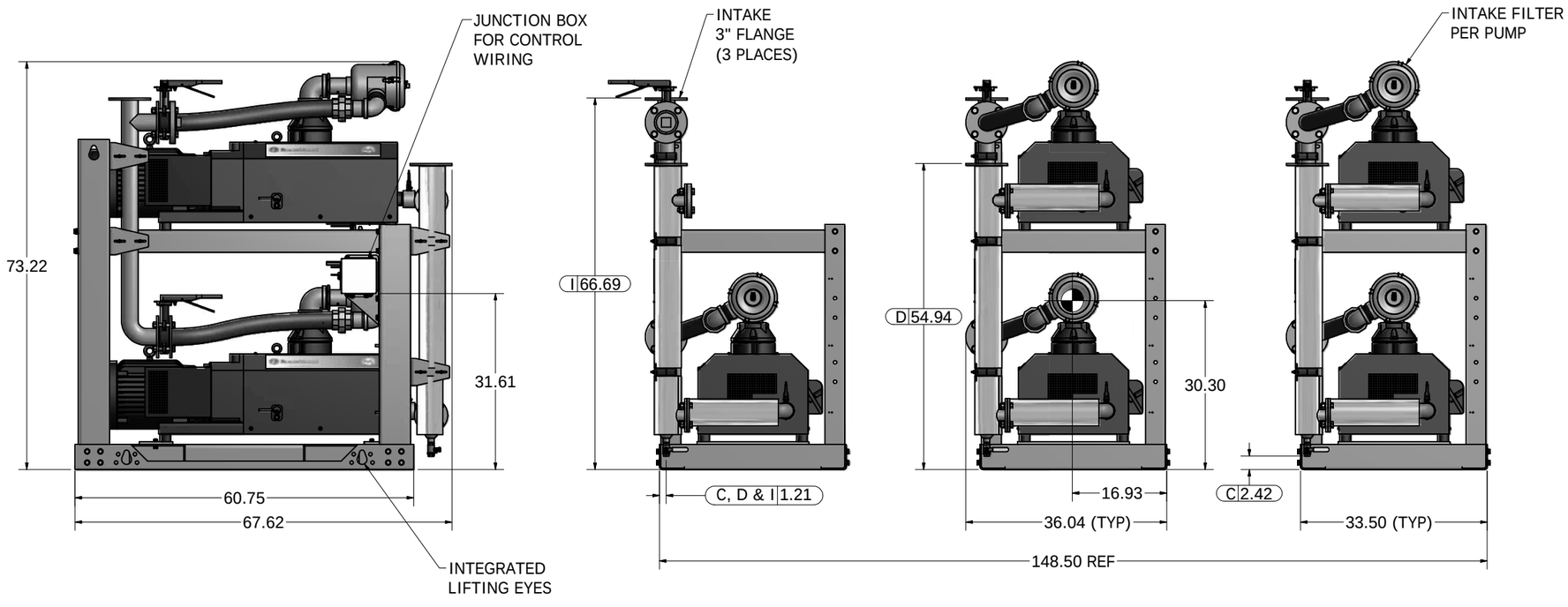

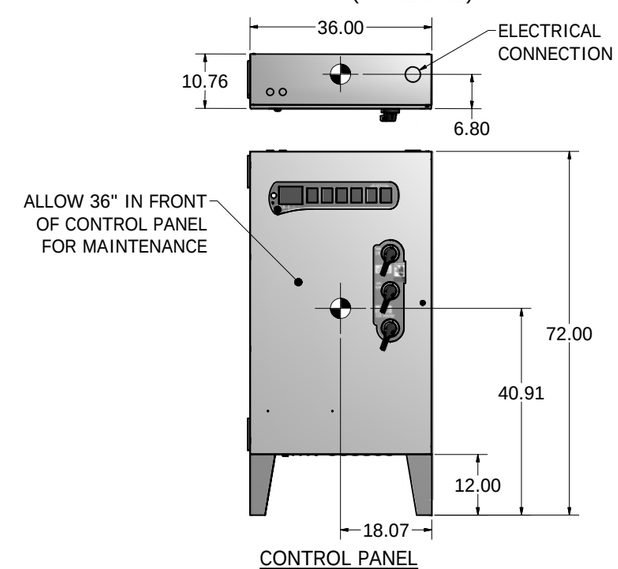

CONTROL PANEL

Revised:	Date:	Drawn: JWO	Date: 02/01/2014
BeaconMedaes	This drawing and the information contained thereon remain the property of BeaconMedaes and may not be used for other than the purpose for which it is loaned without the expressed written permission from BeaconMedaes Engineering.	Scale: 1:12	D
Description: GENERAL ASSEMBLY 15HP PX-EXP-HX CLAW VSD VAC MOD 240G RECEIVER STANDARD		Part Number: 4107 8549 65	
		DN: HOP131370	Rev: 00
		Sheet 1 of 1	DO NOT SCALE THIS DOCUMENT