NOTES:
1. DISCHARGE MUFFLERS WILL BE SHIPPED LOOSE.

2. DX MODULE WEIGHT: 2,291 LBS.
   200G TANK WEIGHT: 658 LBS
   CONTROL PANEL WEIGHT: 272 LBS.

3. ☒ INDICATES LIFTING POINT.

4. ⊕ DENOTES CENTER OF GRAVITY.

SYSTEM CONNECTIONS	
ID	DESCRIPTION
I	INLET LOCATION
D	DISCHARGE LOCATION
C	CONDENSATE DRAIN LOCATION
T	TANK DRAIN LOCATION

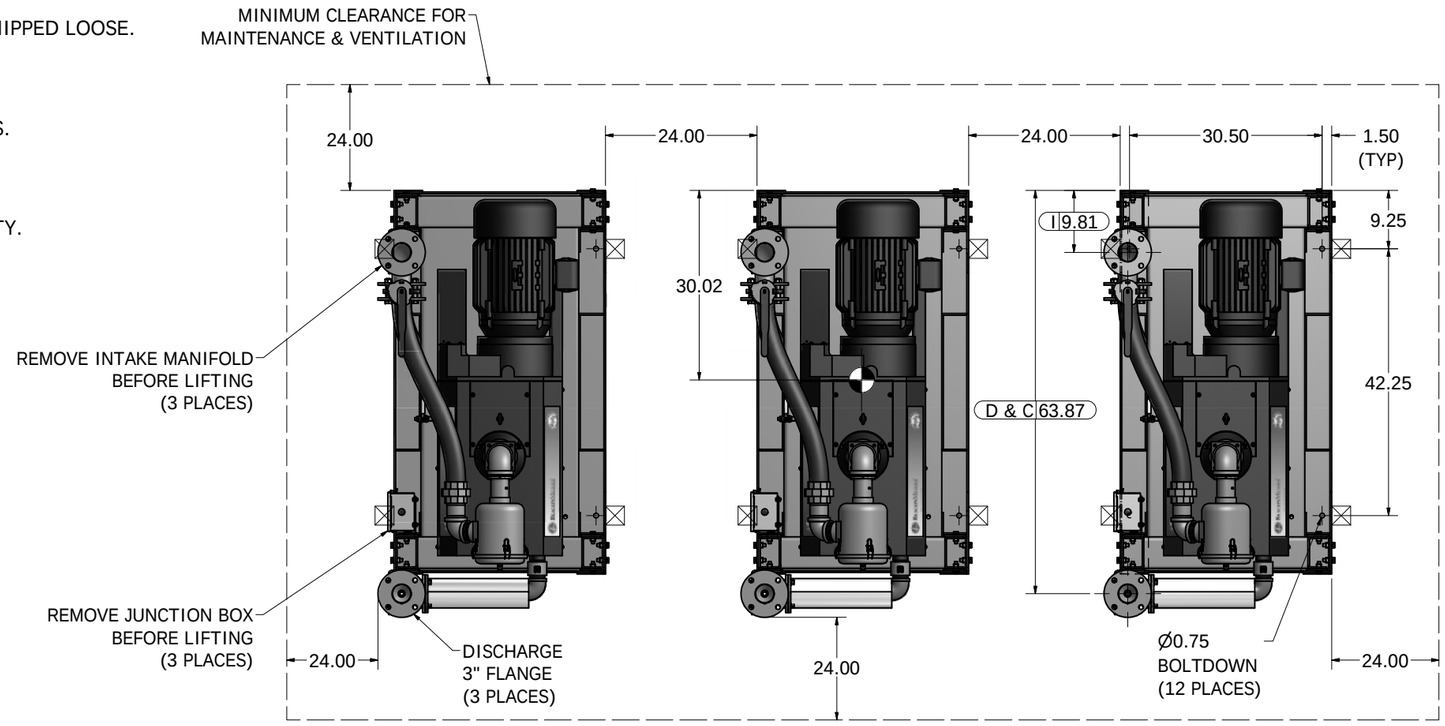

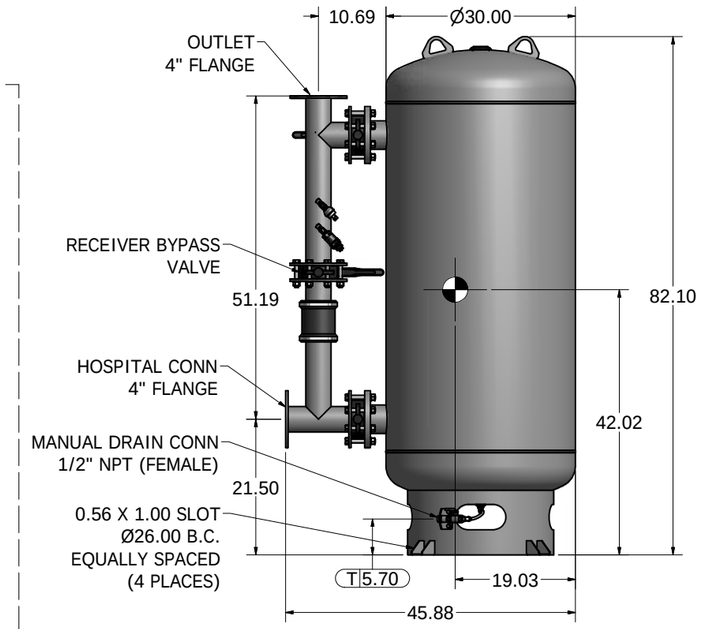

200 GAL VACUUM RECEIVER
4" FLANGED CONNECTIONS
(SCALE 1:12)

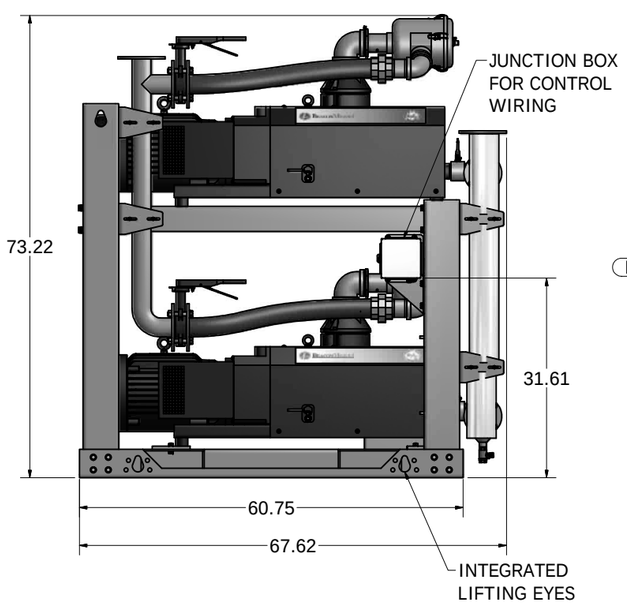

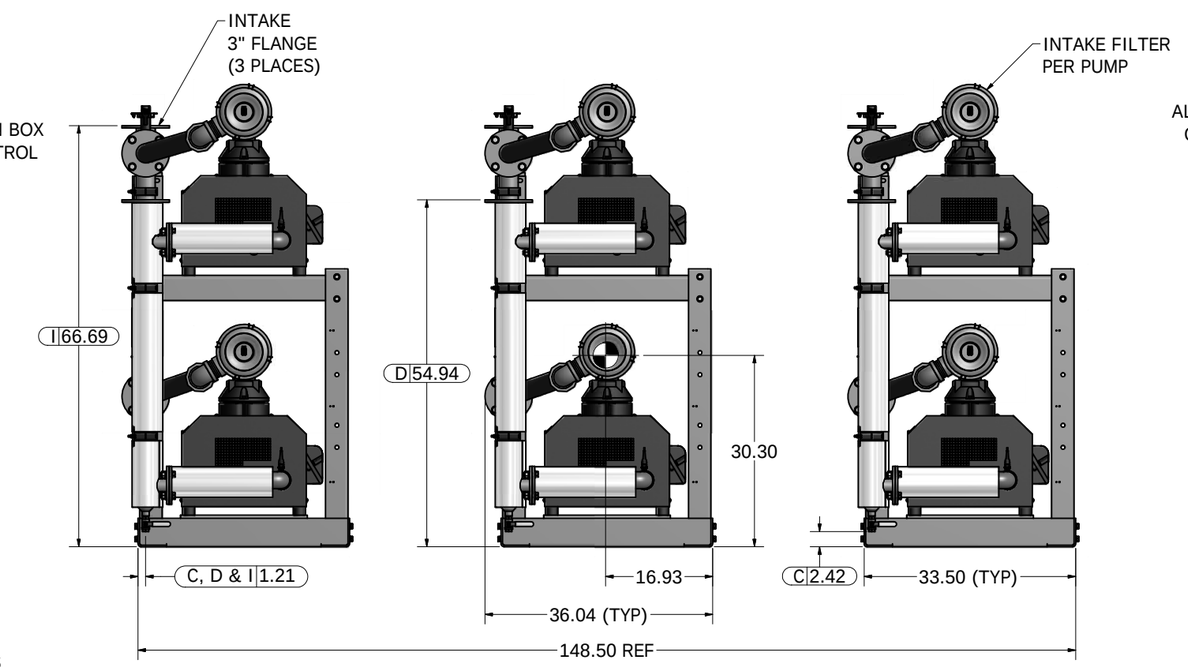

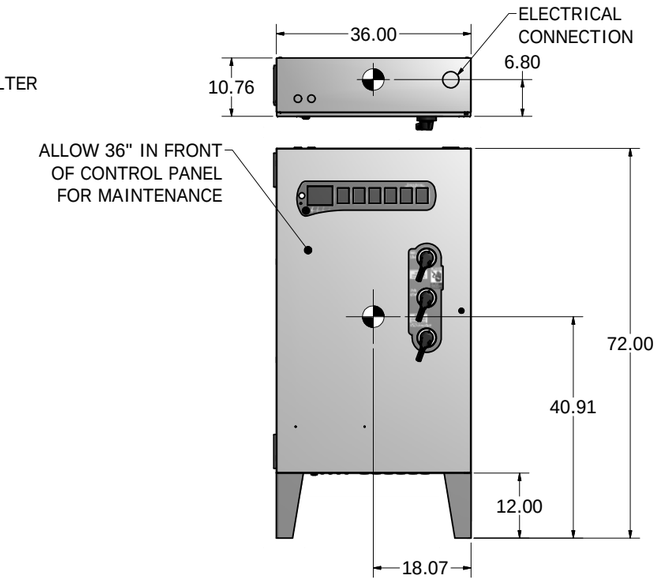

CONTROL PANEL

Revised:	Date:	Drawn: JWO	Date: 02/07/2014
BEACONMEDÆS	This drawing and the information contained thereon remain the property of BeaconMedaes and may not be used for other than the purpose for which it is loaned without the expressed written permission from BeaconMedaes Engineering.	Scale: 1:12	D
Description: GENERAL ASSEMBLY 15HP HX CLAW VSD VAC MOD 200G RECEIVER STANDARD		Part Number: 4107 8549 30	
		DN: HOP131370	Rev: 00
		Sheet 1 of 1	DO NOT SCALE THIS DOCUMENT