Notes:

1. DISCHARGE MUFFLER WILL BE SHIPPED LOOSE.
2. PUMP MODULE WEIGHT: 2,643 LBS (INCLUDES FUTURE EXPANSION PUMP).
   240G TANK WEIGHT: 713 LBS.
3. ☒ INDICATES LIFTING POINTS
4. ⊕ DENOTES CENTER OF GRAVITY (INCLUDES FUTURE EXPANSION PUMP).

SYSTEM CONNECTIONS	
ID	DESCRIPTION
I	INLET CONNECTION
C	DISCHARGE CONNECTION
D	CONDENSATE DRAIN CONNECTION
T	TANK DRAIN

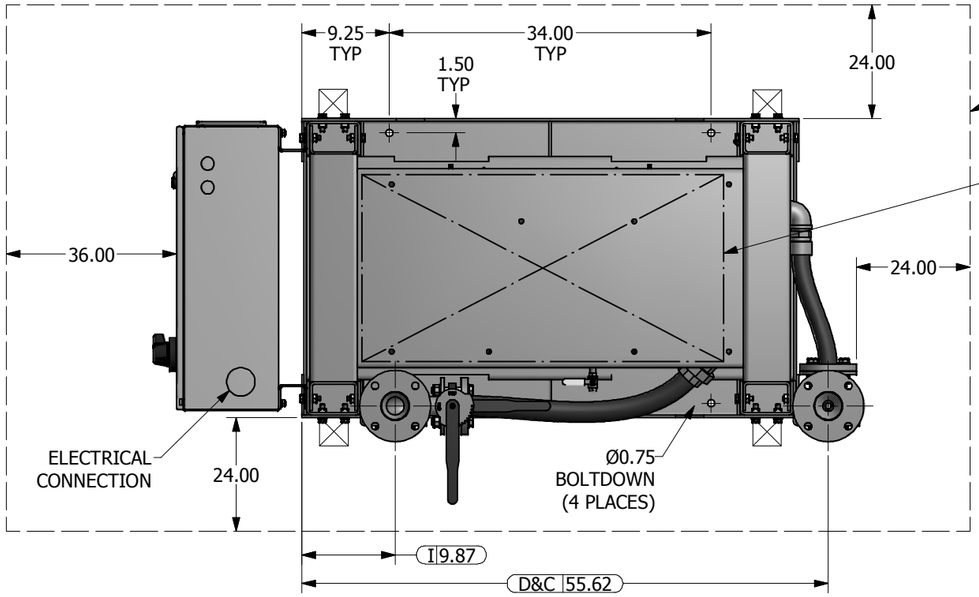

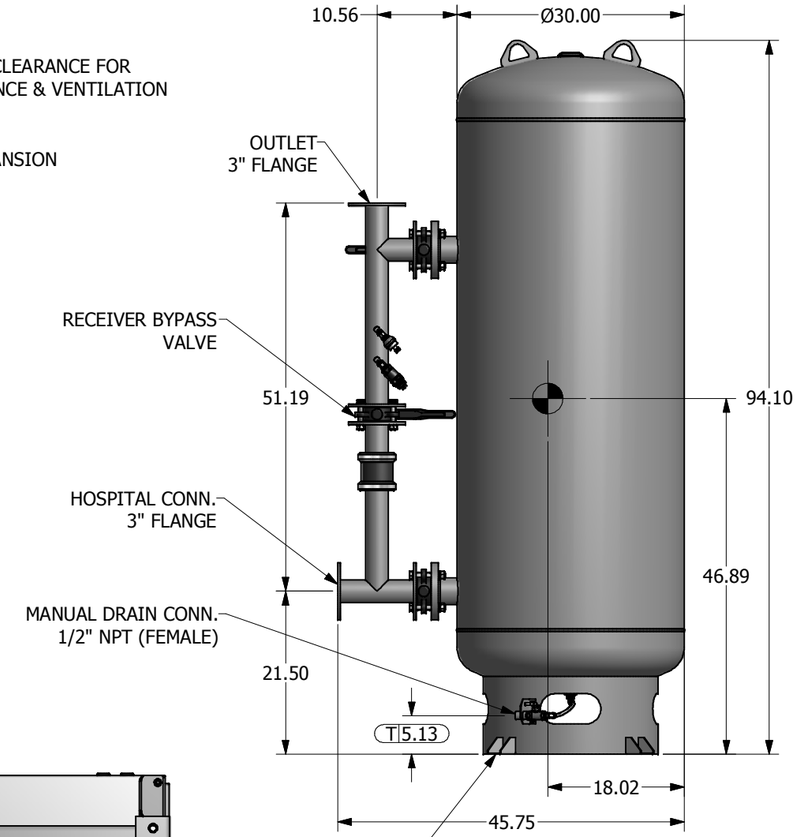

240 GAL VACUUM RECEIVER
3" FLANGED CONNECTIONS
(SCALE 1:10)

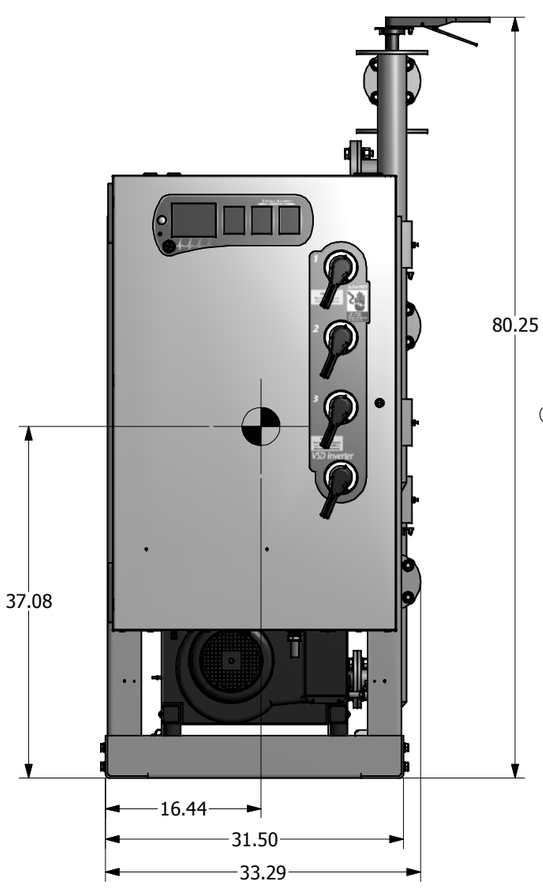

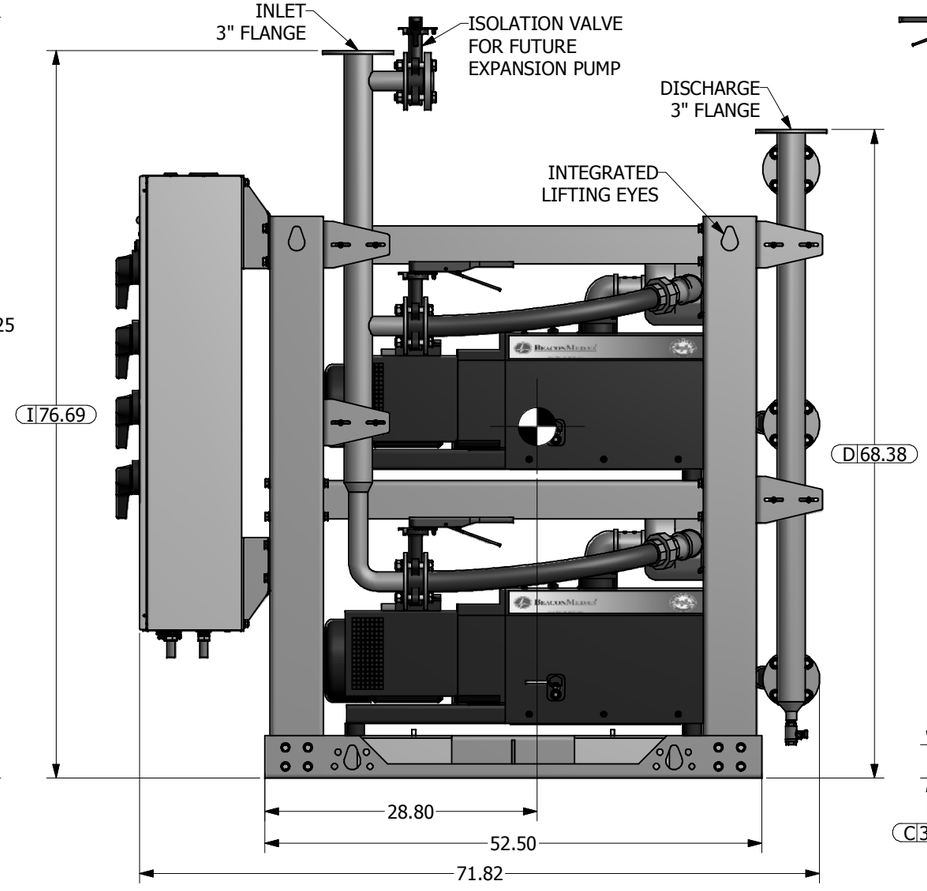

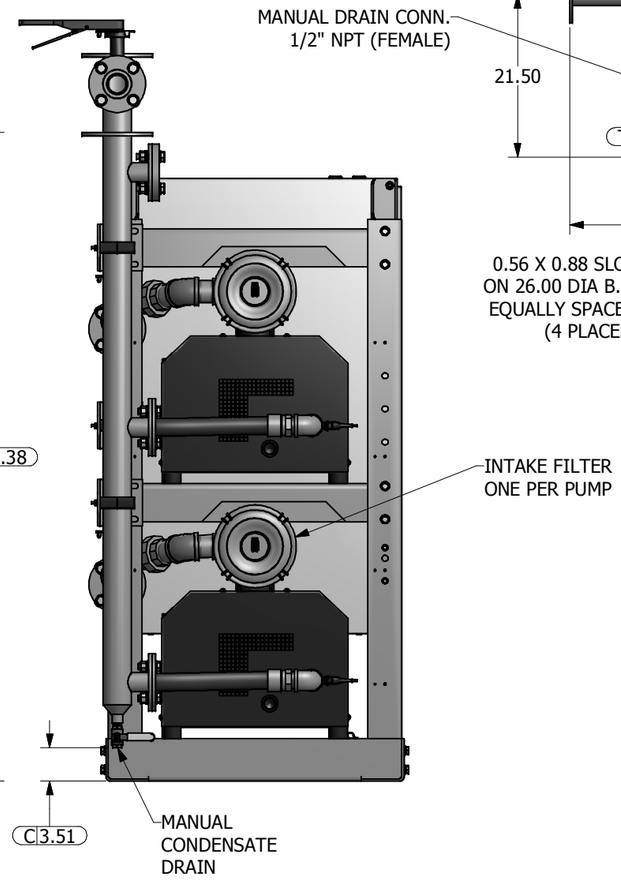

Revised:	Date:	Drawn: bm	Date: 5/12/2010
BEACONMEDAES	This drawing and the information contained thereon remain the property of BeaconMedaes and may not be used for other than the purpose for which it is loaned without the expressed written permission from BeaconMedaes Engineering.		Scale: 1:8 D
Description: GENERAL ASSEMBLY 7.5HP DX-X-TX CLAW VSD VAC MOD 240G RECEIVER STANDARD AND O2 ASSURED		Part Number: 4107 8515 50	
		DN: USN100352	Rev: 00
		Sheet 1 of 1	DO NOT SCALE THIS DOCUMENT