Notes:

1. DISCHARGE MUFFLER WILL BE SHIPPED LOOSE.
2. DX MODULE WEIGHT: 1,405 LBS
   120G TANK WEIGHT: 393 LBS
3. ☒ INDICATES LIFTING POINT.
4. ⊕ DENOTES CENTER OF GRAVITY.

SYSTEM CONNECTIONS	
ID	DESCRIPTION
I	INLET LOCATION
D	DISCHARGE LOCATION
C	CONDENSATE DRAIN LOCATION
T	TANK DRAIN LOCATION

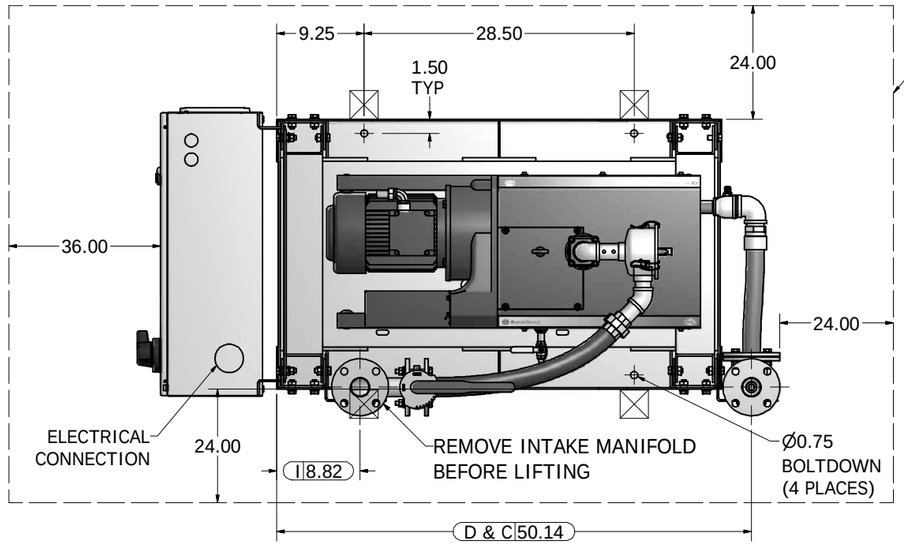

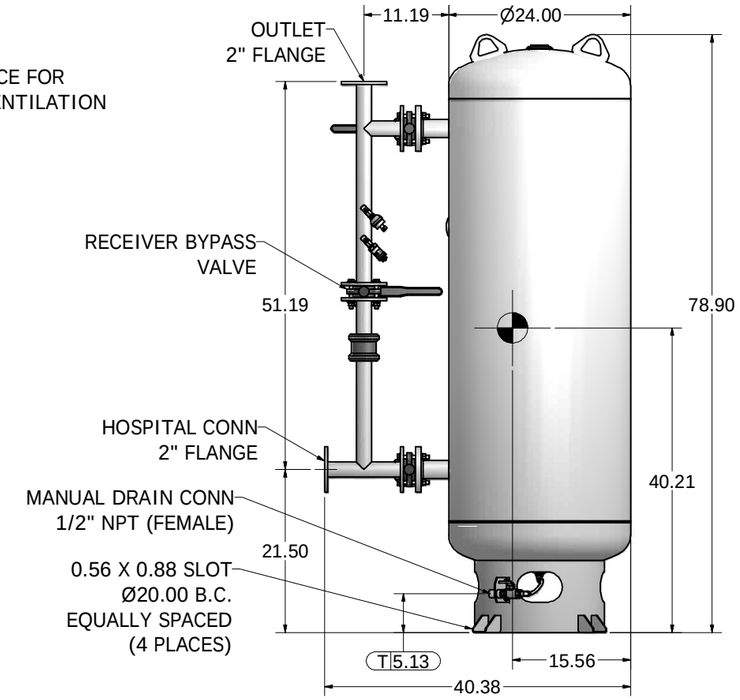

120 GAL VACUUM RECEIVER
2" FLANGED CONNECTIONS
(SCALE 1:10)

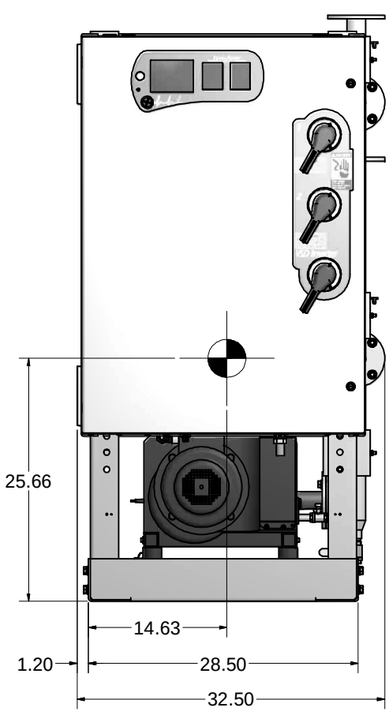

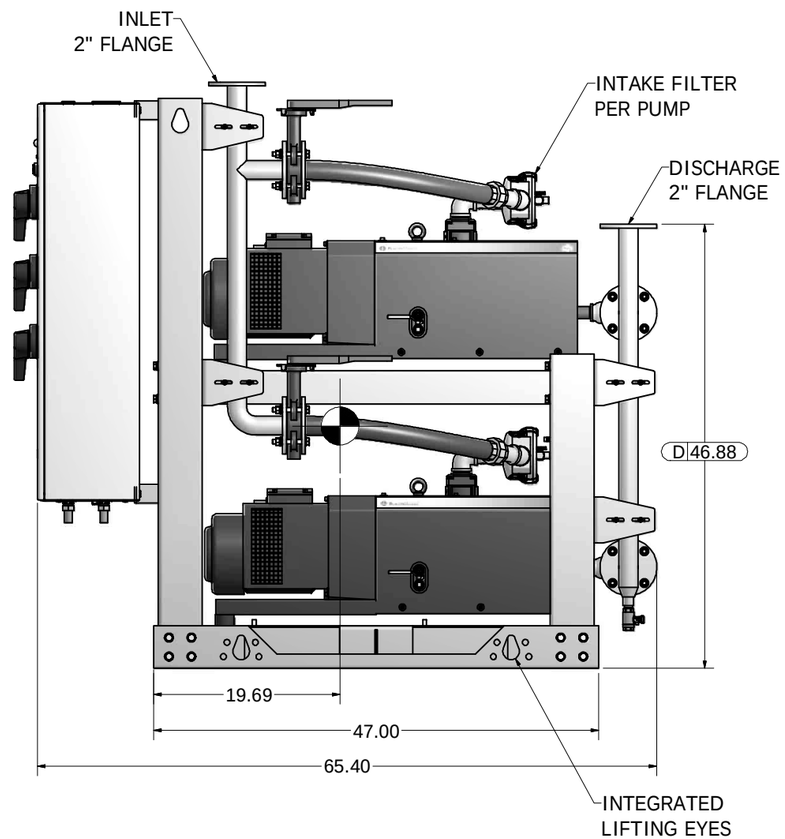

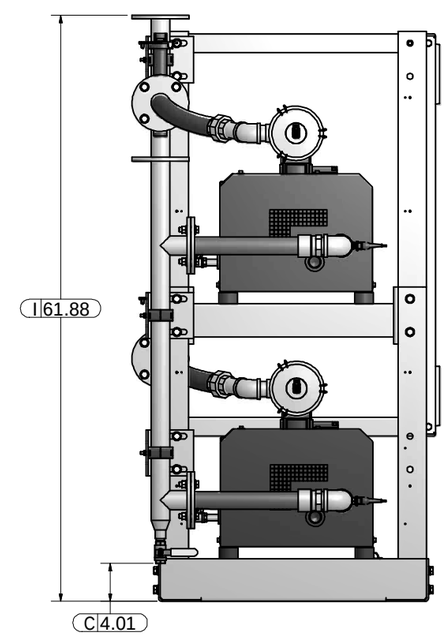

Revised:	Date:	Drawn: BJM	Date: 6/11/2010
BeaconMedaes	This drawing and the information contained thereon remain the property of BeaconMedaes and may not be used for other than the purpose for which it is loaned without the expressed written permission from BeaconMedaes Engineering.	Scale: 1/8	D
Description: GENERAL ASSEMBLY 5.4HP DX CLAW VSD VAC MOD 120G RECEIVER STANDARD AND O2 ASSURED		Part Number: 4107 8513 96	
		DN: USN100301	Rev: 00
		Sheet 1 of 1	DO NOT SCALE THIS DOCUMENT