TotalAlert Infinity™/ MEGA3 Retrofit
Medical Gas Notification System

SPECIFICATION

Refer to SSB-835-01 for detailed specifications of the MEGA3™Alarm and SSB-835-02 for detailed specifications of the TotalAlert Infinity™ Alarm.

Medical Signaling Device

The TotalAlert Infinity™ and MEGA3™ medical gas notification systems provide master and area alarm signals as required by the latest edition of NFPA 99. The alarms are ETL listed to UL 1069 and CSA C22.2 No.205 Signal Equipment.

All field wiring and signals are self-monitoring and on a closed circuit. Fault signals activate on an open circuit.

10.2" Touch Screen LCD Display

- TotalAlert Infinity™ and MEGA3™ Master, Area, and Combination Alarms have a 10.2" touch screen LCD display.
- The LCD touch screen display allows for all alarm programming and set up on site without the use of tools.
- A Green NORMAL condition on the home screen shows that there are no alarms active.
- The home page includes a location/area served badge for the alarm panel, customizable with the keyboard feature of the touch screen during the set up process.
- LCD display contains an adjustable background with many color/brightness options.
- LCD display backlight includes a "sleep mode" option via motion sensor to preserve screen life, adjustable from 5 minutes to 60 minutes. By default, the alarm sleep mode option is not active and the backlight remains on all of the time. If option is active and an alarm occurs during "sleep mode", the backlight turns on and remains on during the alarm condition.
- A full diagnostic self-test of the alarm tests the alarm signals (green and red), the LED indicators on the front panel, the audible horn, and displays all of the alarm set points. Initiate test with the touchscreen controls.

Power

- Input power to the alarm panel is 100 to 250 VAC 50/60 Hz, fused on the input side rated at 250mA, time-delayed.
- The internal power supply converts the input voltage to low voltage 24 VDC.
- All user accessible electronics and wiring utilize low voltage.
- Plastic guard protects user from high voltage wiring.

Transport & Storage

During transport and storage, do not exceed an ambient temperature range of 0°F to 130°F (-18°C to 55°C), a relative humidity range of 10% to 85% with non-condensation, and an atmospheric pressure range of 950 hPa (millibar) to 1050 hPa (millibar).

Biomaster Additive

MEGA3 and TotalAlert Infinity alarms also include Biomaster, an additive proven to reduce bacterial growth. *Disclaimer: Use of this product does not protect user from disease-bearing and food-borne pathogens.*

TotalAlert Infinity™ Master Alarm Panel (Up to 60 locally wired signal inputs, with ability to pull signals from 8 other TotalAlert Infinity™ alarms through Ethernet for maximum of 320 monitored signals).

MEGA3™ Master Alarm Panel (Up to 40 Input signals)

Area Alarm Panel (Up to 8 gases)

TotalAlert Infinity™ and MEGA3™ Alarm Dimensions

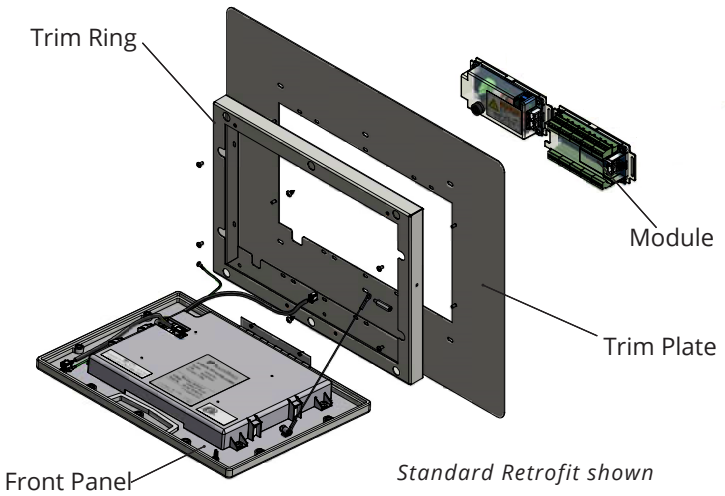

Standard Retrofit shown

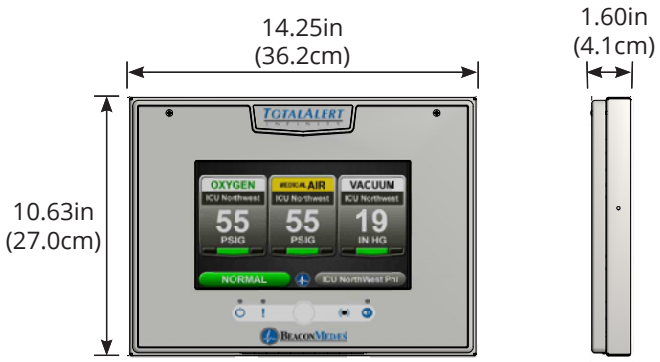

Standard Retrofit (trim ring only)

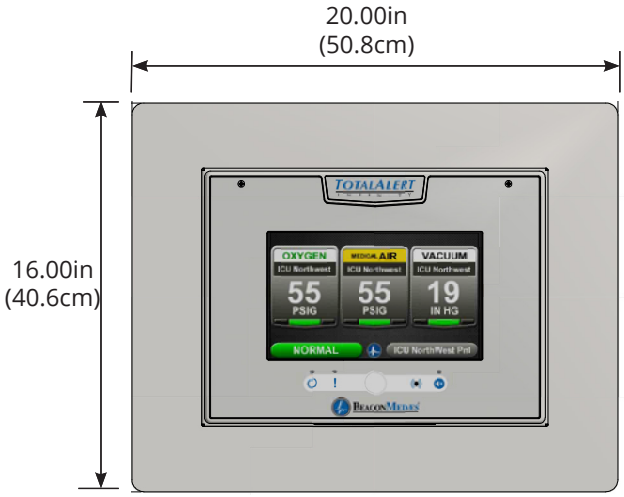

Standard Retrofit with trim plate

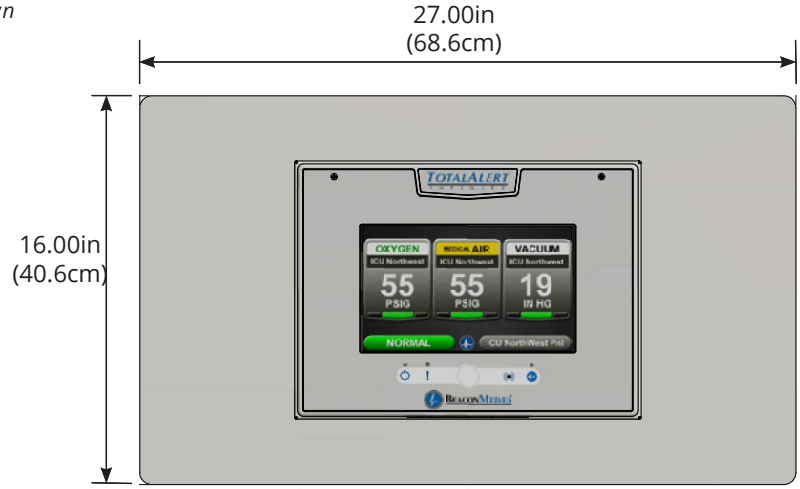

Retrofit (wide trim plate, Part# 4107 2206 15)

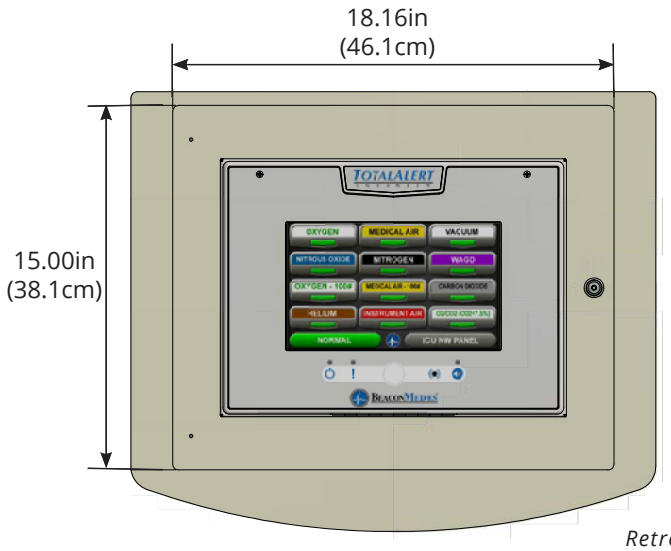

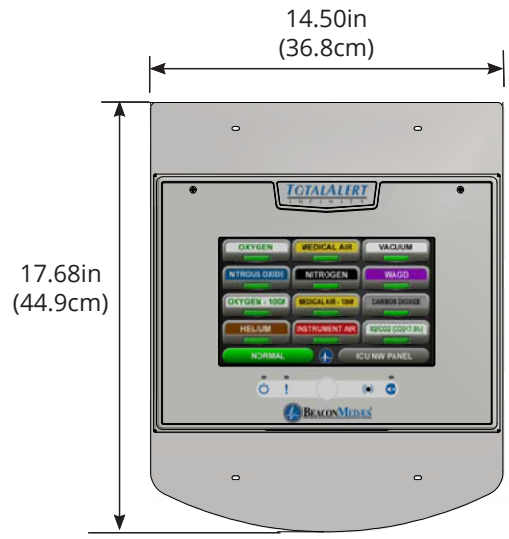

Retrofit with TotalAlert 1 trim kit (shown with both sizes, Part# 4107 2206 16)

Variable A Alarm Series	
Allowable Value	**Description**
M3	MEGA3™
T3	TotalAlert Infinity™

Variable B Alarm Type and Size	
Allowable Value	**Description**
B00	Blank
A10	Area Alarm, Up to 8 Area Gases
M01	Master, 0 Inputs, 16 Relay Outputs
M10	Master, 20 Inputs
M11	Master, 20 Inputs, 16 Relay Outputs
M12	Master, 20 Inputs, 32 Relay Outputs
M13	Master, 20 Inputs, 48 Relay Outputs
M20	Master, 40 Inputs
M21	Master, 40 Inputs, 16 Relay Outputs
M22	Master, 40 Inputs, 32 Relay Outputs
M30	Master, 60 Inputs, 0 Relay Outputs
M31	Master, 60 Inputs, 16 Relay Outputs
M40	Master, 64 Inputs
C01	Combination, 10 Inputs, 6 Relay Outputs, Up to 3 Area Gases
C10*	Combination, 20 Inputs, Display up to 6 Area Gases
C11*	Combination, 20 Inputs, 16 Relay Outputs, Display up to 6 Area Gases
C12*	Combination, 20 Inputs, 32 Relay Outputs, Dispaly up to 6 Area Gases
C20	Combination, 40 Inputs, Display up to 6 Area Gases
C21	Combination, 40 Inputs, 16 Relay Outputs, Display up to 6 Area Gases
C30	Combination, 60 Inputs, Display up to 6 Area Gases
C40	Combination, 7 Inputs, 6 Relay Outputs, 4 Inputs for 4-20mA devices
C41*	Combination, 27 Inputs, 6 Relay Outputs, 4 Inputs for 4-20mA devices
C42	Combination, 47 Inputs, 6 Relay Outputs, 4 Inputs for 4-20mA devices
C43	Combination, 67 Inputs, 6 Relay Outputs, 4 Inputs for 4-20mA devices
C44	Combintation, 7 Inputs, 6 Relay Outputs, 4 Inputs for 4-20mA devices, Up to 6 Area Gases (maximum display of 6 gas badges, in combination of 4-20mA and gas sensors)

Notes:

* Limitations on Combination Panels for MEGA3

- C10, C11, C12 Combinations
  - » 0-10 source signal Inputs used, Display up to 6 Area gases
  - » 11-20 source signal Inputs used, Display up to 4 Area gases
- C41
  - » 0-20 source signal Inputs used, Display up to 4 4-20mA devices
  - » 21-27 source signal Inputs used, Display up to 2 4-20mA devices

TotalAlert 2

- M40 - Kit specific to TotalAlert 2 master alarms to use existing input signals

Patent Pending

© BeaconMedæs 08-30-16

Retrofit Alarm Models

___ - ___ - ___ - R
A B C

NOTE: For Area Alarm panels, sensor assemblies are not specific to "Remote" or "Local" installations. It is not necessary to designate the installation type in the model numbering.

Variable C Gas Type (Area and Combination Only)	
Allowable Value	**Description**
O	Oxygen
X	Nitrous Oxide
A	Medical Air
V	Medical Vacuum
W	WAGD
N	Nitrogen
C	Carbon Dioxide (CO2)
D	Oxygen 100 psig
F	Medical Air 100 psig
G	Carbon Dioxide 100 psig
9	Instrument Air
1	CO2-O2 (CO2 over 7%)
2	O2-CO2 (CO2 not over 7%)
3	HE-O2 (HE over 80%)
4	O2-HE (HE not over 80%)
7	Laboratory Air
8	Laboratory Vacuum
H	Helium
J	Argon
S	Surgical Air
B	AGSS
E	N2O-O2
M	Mixed Gas

Additional Trim Plate Kits	
Part Number	**Description**
4107 2206 15	Retrofit Kit with 16" x 27" trim plate
4107 2206 16	Retrofit Kit with single and double trim plates for TotalAlert 1

For alterntive trim panels, order standard retrofit kit plus additional trim plate kits.

Example: TotalAlert Infinity™ Master Alarm Retrofit with 40 Inputs and 32 Relay Outputs

Example Model Number: T3-M22-R

Example: TotalAlert Infinity™ Retrofit AREA Alarm with 4 gases - Oxygen, Nitrous Oxide, Medical Air, and Vacuum

Example Model Number: T3-A10-OXAV-R

Example: MEGA3™ Combination Retrofit Alarm with 10 Inputs, 6 Relay Outputs, and 3 gases - Oxygen, Medical Air, and Medical Vacuum

Example Model Number: M3-C01-OAV-R

Typical Retrofit Layouts (Recommended Installation)

Module Components	
Letter Designator	**Description**
A	B05 Power Suppy
B	B10 - B12 Module (Signals, 20 Inputs)
C	B20 Module (TA2 Retrofit only, 64 Inputs)
D	B40 - B42 Module (16 Relay Out)
E	B50 Module (4-20mA, 4 devices, 7 inputs, 6 outputs)
F	B60 Module (Gas Input, 8 gases, 1 output)
G	B65 Module (Combo, 3 gases, 10 inputs, 6 outputs)

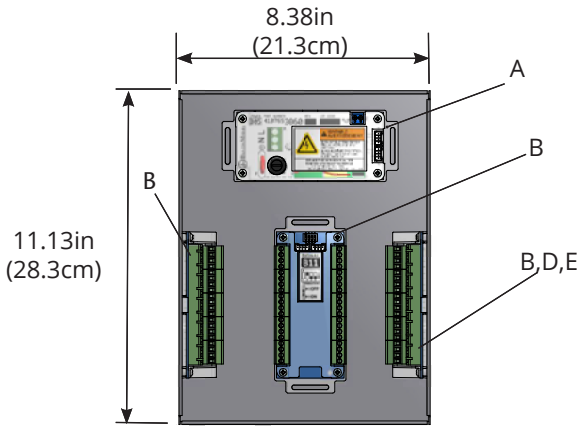

Multi-Signal Alarm from Medaes, Ohmeda, or Ohio

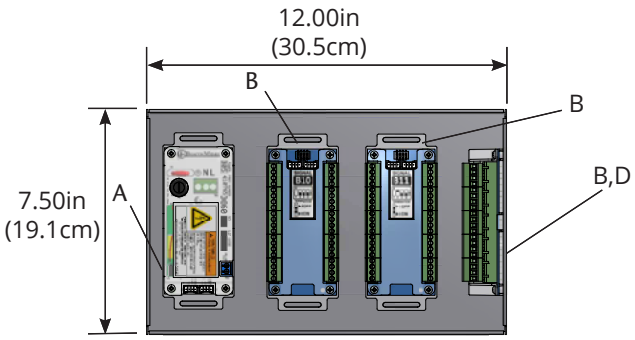

Digital I and II Alarm from Chemetron

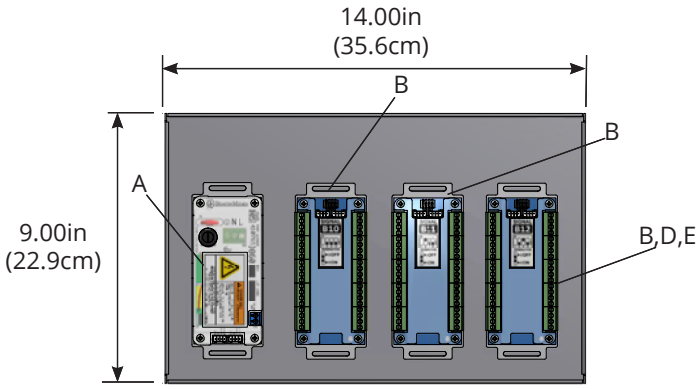

MedPlus Medical Gas Alarm from Hill-Rom or Medaes or Alert1 and 2 Series Alarm from Amico

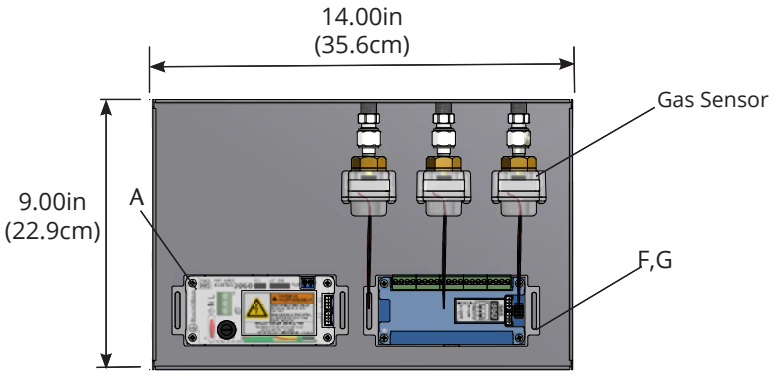

MedPlus Medical Gas Alarm from Hill-Rom or Medaes or Alert1 and 2 Series Alarm from Amico

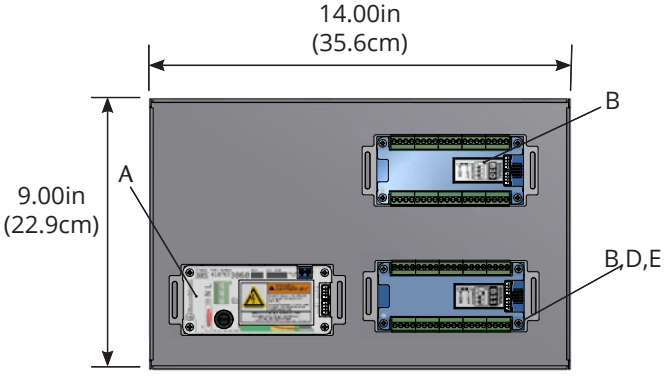

MedPlus Medical Gas Alarm from Hill-Rom or Medaes or Alert1 and 2 Series Alarm from Amico

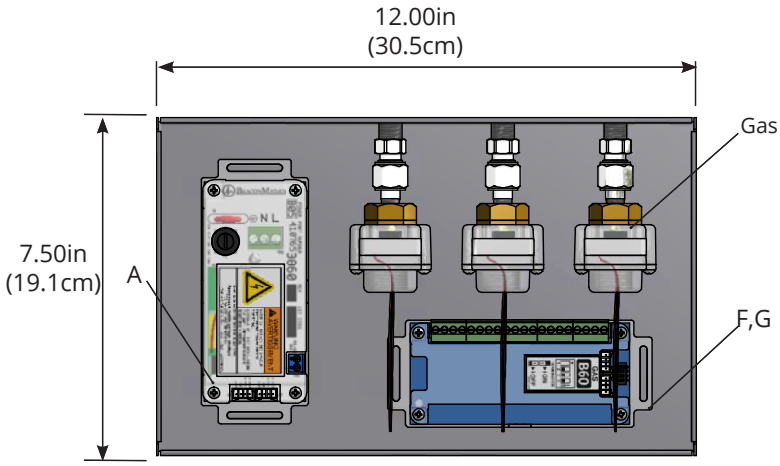

Digital I and II Alarm from Chemetron

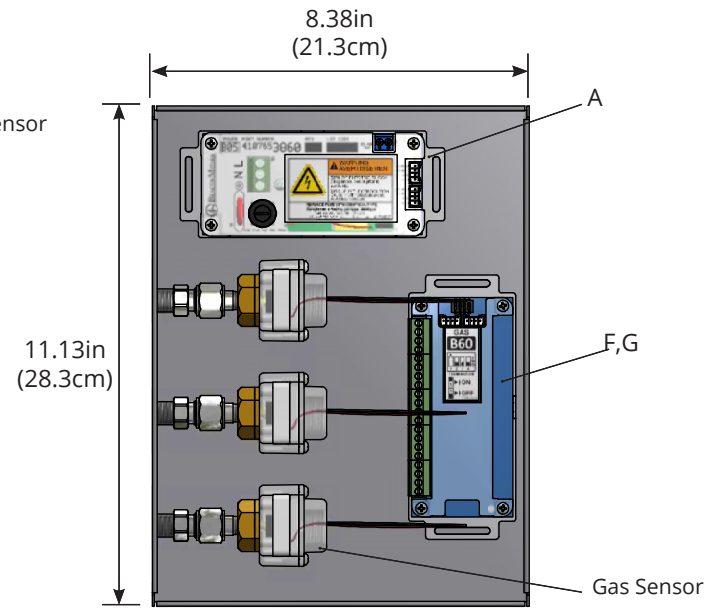

Line Pressure Alarms from Medaes, Ohmeda, or Ohio

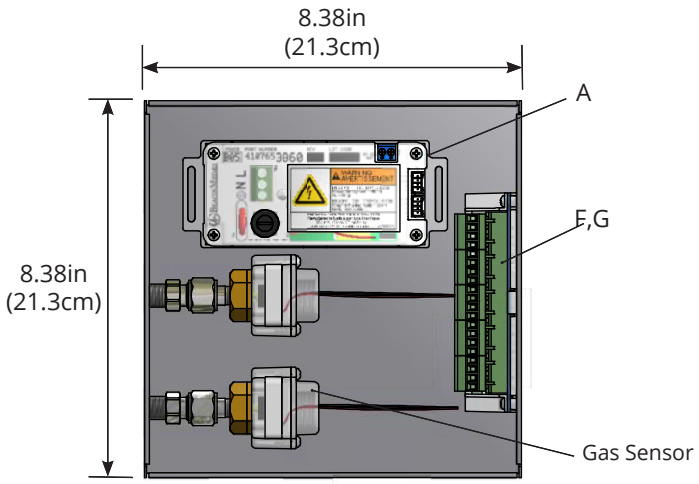

Line Pressure Alarms from Medaes, Ohmeda, or Ohio

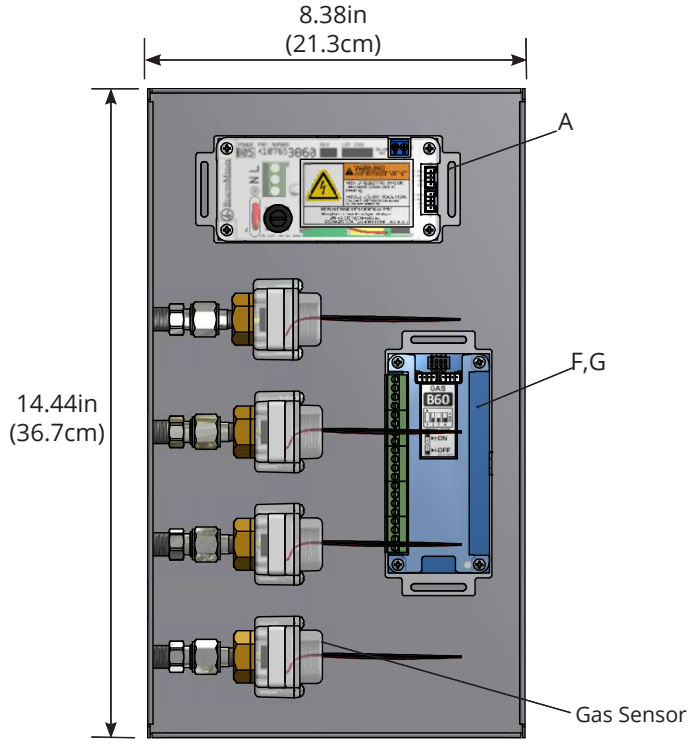

Line Pressure Alarms from BeaconMedaes, Medaes, Ohmeda, or Ohio

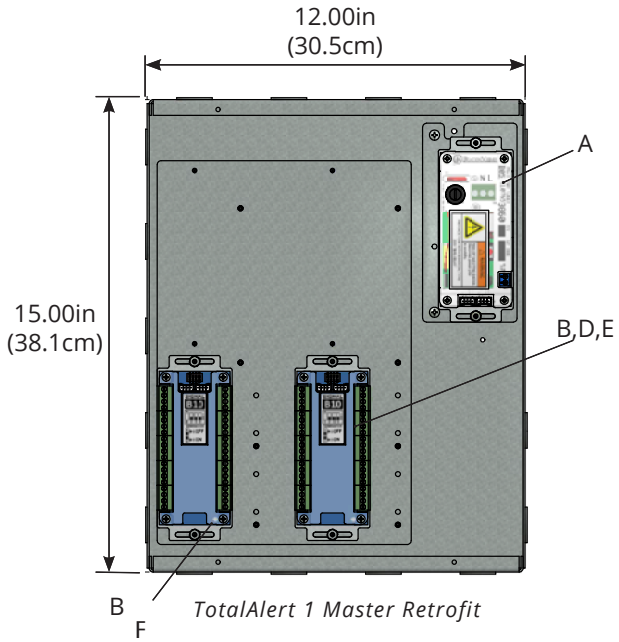

TotalAlert 1 Master Retrofit

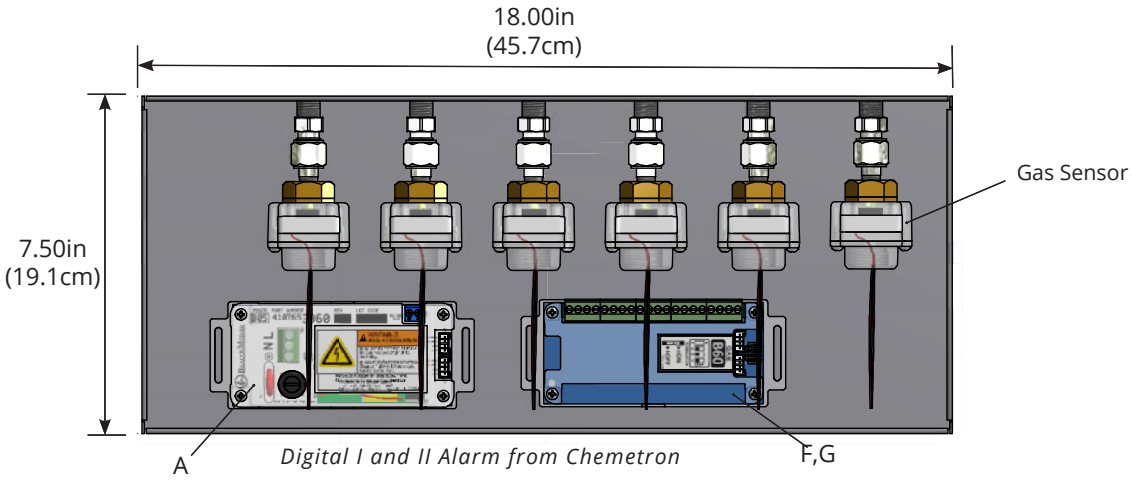

Digital I and II Alarm from Chemetron

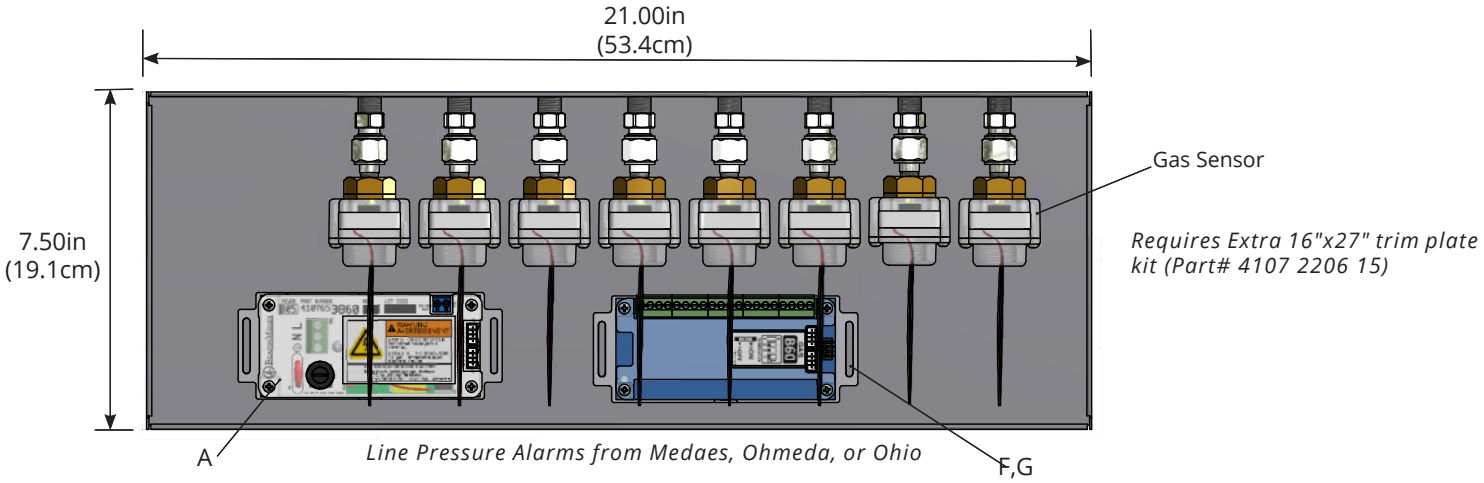

Requires Extra 16"x27" trim plate kit (Part# 4107 2206 15)

Line Pressure Alarms from Medaes, Ohmeda, or Ohio

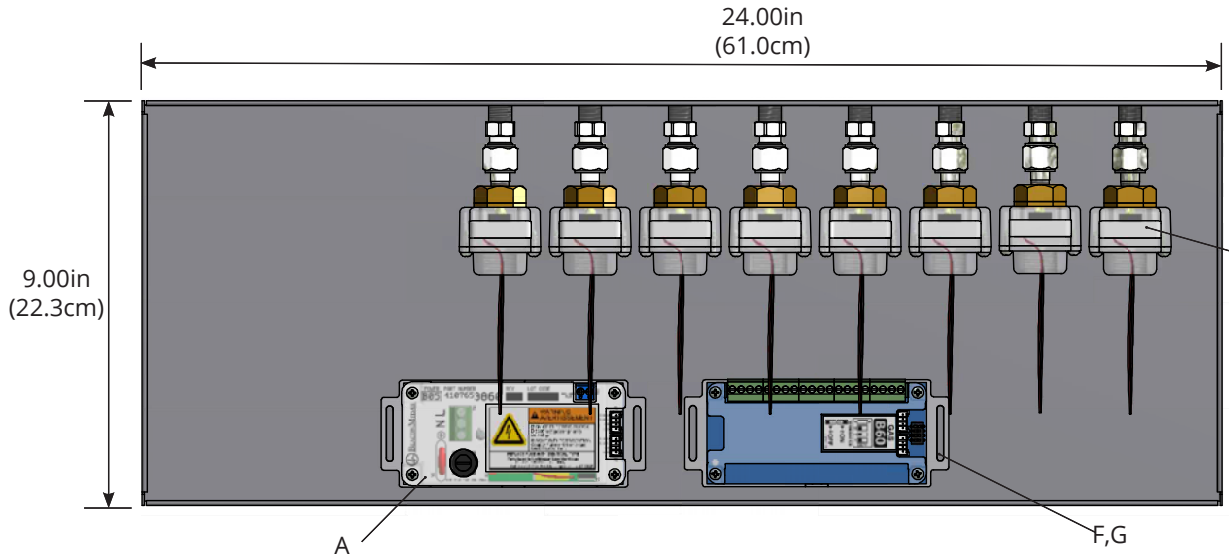

Requires Extra 16"x27" trim plate kit (Part# 4107 2206 15)

MedPlus Medical Gas Alarm from Hill-Rom or Medaes or Alert 1 and 2 Series Alarm from Amico

TotalAlert Infinity™ Area Alarm Gas Sensor Installation

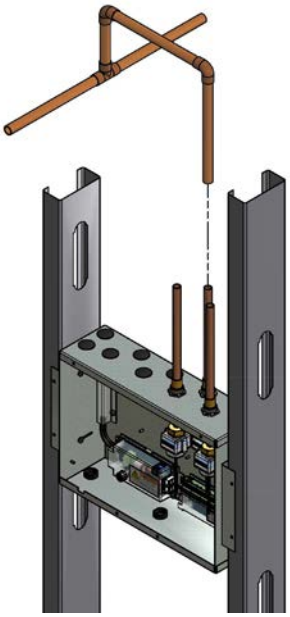

Local Sensor Installation

Remote Sensor Installation

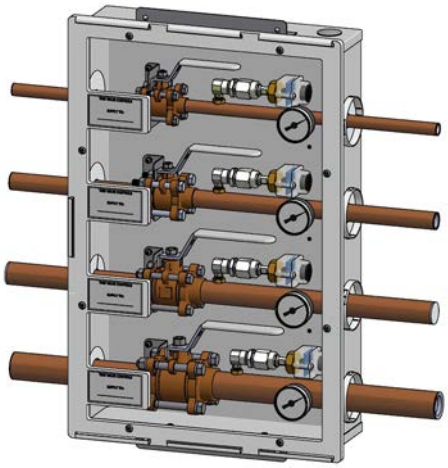

Zone Valve Box Sensor Installation

(For Zone Valve Box mounting, an additional Installation Kit is required, part number 4107 4016 25 for each sensor)

TotalAlert Infinity™ and MEGA3™ Alarm: Additional Components

Gas Sensor Module Options	
Part Number	**Gas Type Sensor Assembly**
4107 4016 75	Oxygen
4107 4016 76	Nitrous Oxide
4107 4016 77	Medical Air
4107 4016 78	Medical Vacuum
4107 4016 79	Nitrogen
4107 4016 80	Instrument Air
4107 4016 81	WAGD
4107 4016 82	Carbon Dioxide
4107 4016 83	Carbon Dioxide/Oxygen
4107 4016 84	Oxygen/Carbon Dioxide
4107 4016 85	Helium/Oxygen
4107 4016 86	Oxygen/Helium
4107 4016 87	Helium
4107 4016 88	Laboratory Air
4107 4016 89	Laboratory Vacuum
4107 4016 90	Oxygen 100 psig
4107 4016 91	Medical Air 100 psig
4107 4016 92	Carbon Dioxide 100 psig
4107 4016 93	Argon
4107 4016 94	AGSS
4107 4016 95	Nitrous Oxide/Oxygen

Gas Sensor Assembly includes the Gas Specific Sensor, DISS Check Fitting, and Copper Tube.

TotalAlert Infinity™ alarms are expandable with additional modules, see Operation & Maintenance Manual for options and part numbers.

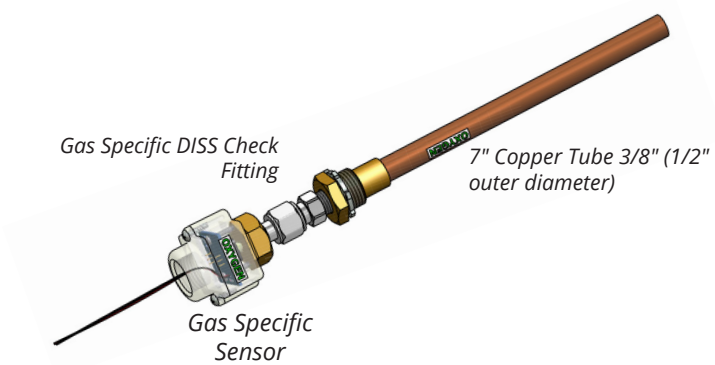

BeaconMedæs
1800 Overview Drive
Rock Hill, SC 29730
Phone: (803) 817-5600
Fax: (803) 817-5750
www.beaconmedaes.com

LLOYD'S REGISTER · LRQA ISO 13485
LLOYD'S REGISTER · LRQA ISO 14001
LLOYD'S REGISTER · LRQA OHSAS 18001