Operation and Maintenance Instructions

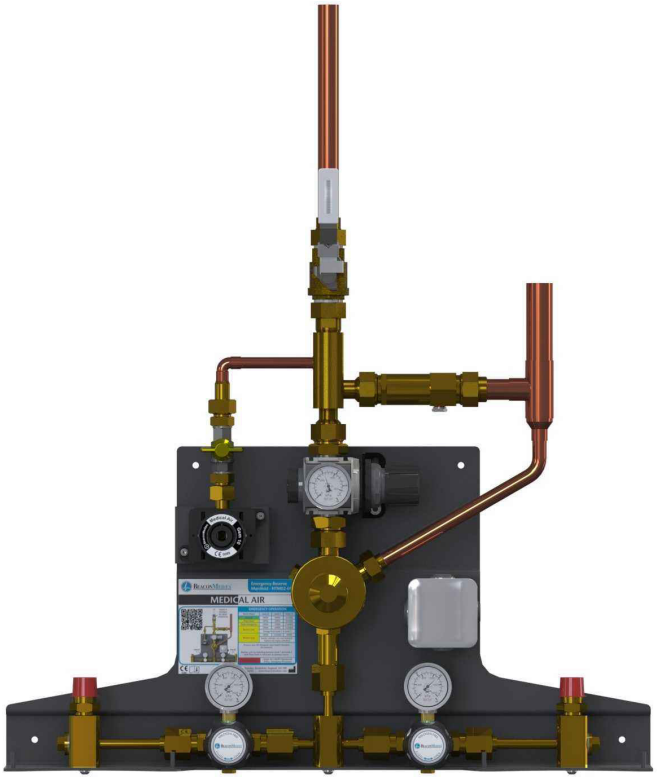

Emergency Reserve Manifold - ERM

HTM02-01

Part number 2005715
Revision 05
May 24, 2019

BeaconMedæs®

Operation and Maintenance Manual

Emergency Reserve Manifold

This unit is purchased from:

Date purchased:

Model number:

Serial number:

Option(s) included:

Any information, service or spare parts requests should include the serial number and be directed to:

BeaconMedæs
Telford Crescent, Staveley
Derbyshire S43 3PF

Telephone: +44 (0) 1246 474242
Email: gbn.info@beaconmedaes.com
Website Contacts: www.beaconmedaes.com

BeaconMedæs reserves the right to make changes and improvements to update products sold previously without notice or obligation.

Atlas Copco Ltd. trading as Atlas Copco Medical
Unit 18 Nuffield Way, Abingdon, Oxfordshire, UK OX14 1RL

Personnel must make themselves familiar with the contents of this manual and the function of the unit before installing, operating or maintaining.

Abbreviations			
Abbreviation	Full Description	Abbreviation	Full Description
BS	British Standard	kPa	Kilo pascals
BSP	British Standard Pipe	Max	Maximum
CO2	Carbon dioxide	Med	Medical
°C	Degree Celsius	m	Meter
ø	Diameter	mm	Millimetres
ERM	Emergency reserve manifold	Min	Minimum
EN	European Standards	N2	Nitrogen
1st	First	N2O	Nitrous oxide
HTM	Health Technical Memorandum	NRV	Non-return valve
ID	Identification	OD	Outside Diameter
“	Inch	O2	Oxygen
ISO	International Standard Organisation	%	Percentage
Kg	Kilograms	2nd	Second

Table of Contents

Figures

Tables

0. Safety Precautions

This section gives safety, storage and handling information for the BeaconMedæs Emergency Reserve Manifold only. Component parts lists and descriptions are available on request.

Operators should have carefully read and become familiar with the contents of this manual before maintaining the Emergency Reserve Manifold.

Operators are expected to use common sense safety precautions, good workmanship practices and follow any related local safety regulations.

0.1 Identification of symbols

The following symbols apply to this product and are used in these instructions and on the product in question. The meanings of these symbols are as specified below: -

	Read instructions
	Ambient temperature range
	Ambient humidity range
	Ambient pressure range
	Date of manufacture
	Do not dispose of in general waste

0.2 Environmental Transport and Storage Conditions

All products are separately packaged and stored in controlled conditions.

0.3 Environmental Operating Conditions

Adverse environmental conditions and harsh abrasives or chemicals may cause damage to the unit.

0.4 Environmental Protection

Discard the unit and/or components in any standard refuse facility. The unit does not contain and hazardous substances.

0.5 Electromagnetic Interference

Not applicable

0.6 Cleaning

The manifold should be wiped over with a damp cloth frequently to remove any dust or foreign substances

0.7 Safety Notice

Persons undertaking any installation and/or maintenance must be fully trained in specialist work of this nature.

The “PERMIT TO WORK” procedure must be adhered to for all installations once commissioned.

The manifold is designed and built in accordance with HTM 02-01 regulations and therefore should be installed as such.

Oil, grease and jointing compounds must not be used.

Do not attempt to prove the pressure relief valve, under any circumstances, by altering the regulator. Pressure relief valves must be removed and tested off site by a registered test centre and a certificate of conformity issued.

1. General Information

1.1 Introduction

The BeaconMedæs Emergency Reserve Manifold (ERM) is principally designed for use as a secondary source of supply, for emergency use or to permit servicing or repair.

The ERM supplies one of the following Medical gases to a piped distribution system, Oxygen, Nitrous Oxide, O2/N2O 50%: 50%, Medical Air, Surgical Air, Nitrogen & Carbon Dioxide.

See **figure 1** for general arrangement and **figure 2** for the schematic diagram.

The Emergency Reserve Manifold consists of: -

1. 2 x High Pressure Isolation Valves (1 per cylinder bank.
2. 2 x Cylinder Pressure Gauges with Contact Alarms (for signalling reserve low alarm fault).
3. 1st Stage Pressure Regulator (c/w inlet filter).
4. 2nd Stage Pressure Regulator.
5. Gauge for Distribution System Pressure.
6. Integral Non-return Valve Assembly.
7. 1st Stage Pressure Relief Valve.
8. Line Pressure Relief Valve.
9. Lockable Isolation Valve.
10. Medical Gas Sampling Test point (GEM 10).
11. Test point Isolation Valve.
12. Pipeline connection point (22mm OD Copper Tube)
13. Pressure Relief Exhaust Connection point (28mm OD Copper Tube).
14. Termination Box For Remote Alarm.
15. 2 x Cylinder Manifold Header Block.
16. 2 x Gas Specific Non-return Valve.
17. Product Label C/W Instructions for Use.
18. 4 x Chain Hooks for Cylinder Restraint.

Note: Cylinder Tailpipes are also required but should be ordered separately. Header extensions are available but are also ordered separately.

Figure 1 - ERM General Arrangement (2 x 1 Manifold as standard). Additional Cylinder Header Extension kits available.

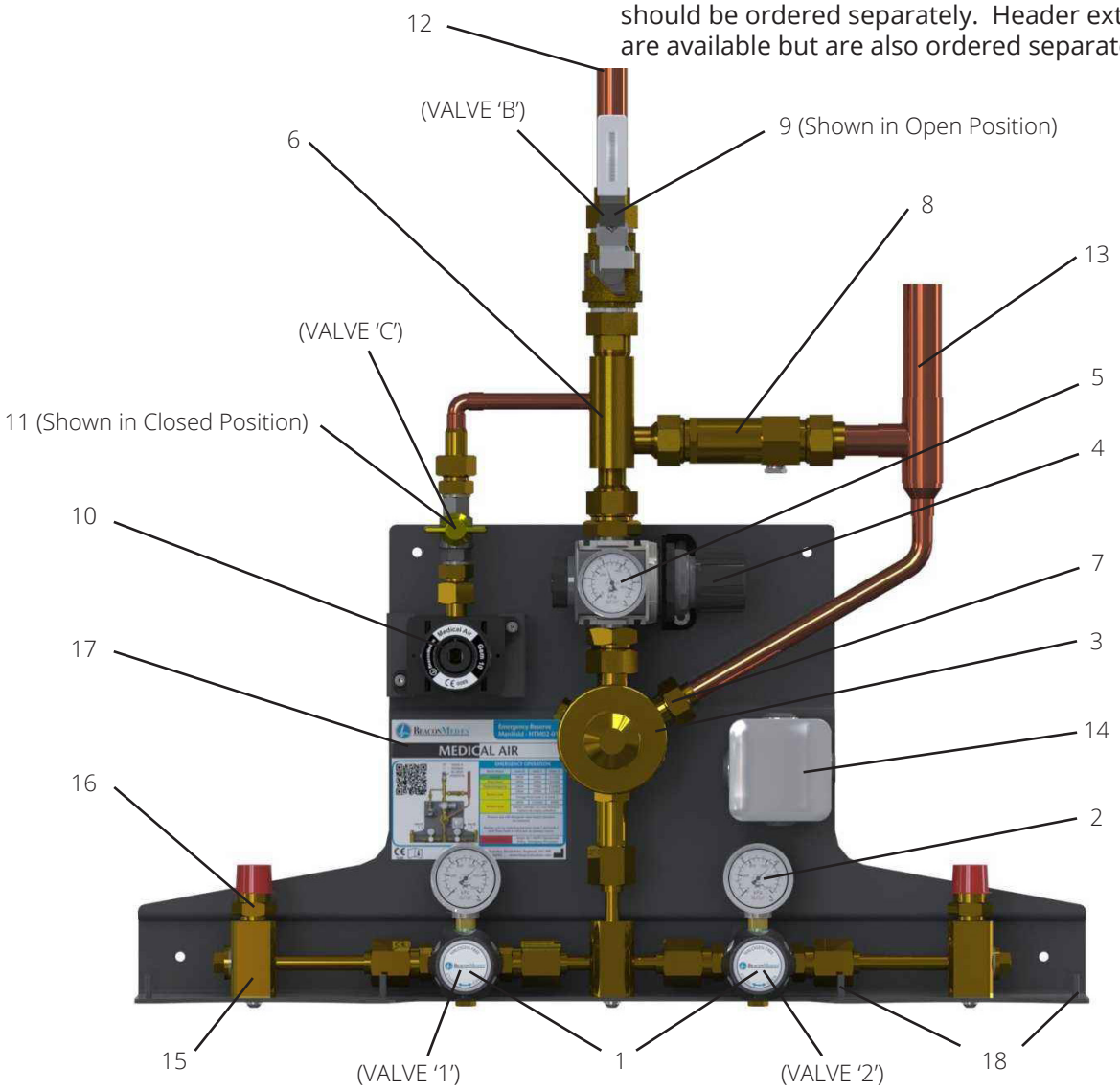

Figure 2 - Schematic Diagram

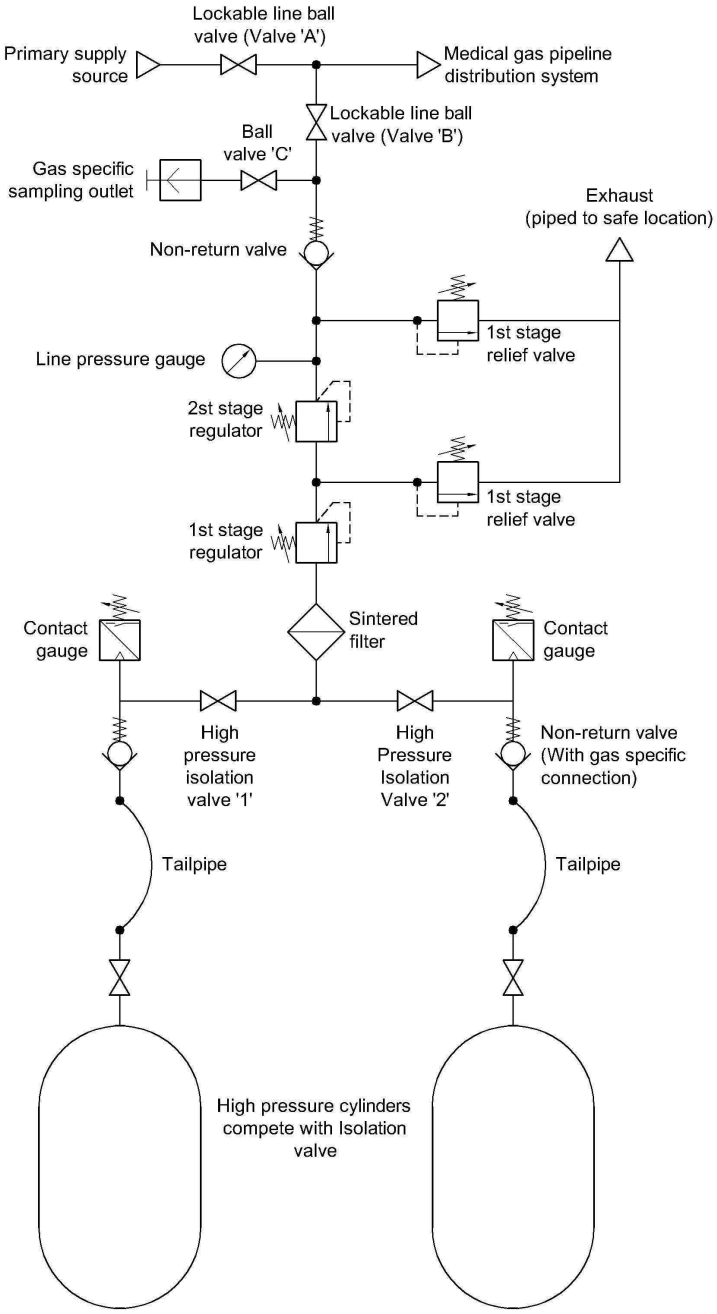

Symbols to BS2971 & ISO 1219-1

Additional manifold headers can be connected to the Emergency Reserve Manifold (ERM) to increase its gas supply capacity.

The manifold is connected to the distribution system downstream of the primary medical gas supply system. The ERM can be isolated from the distribution system by the lockable isolation valve supplied. This valve should be left open during normal operation, so the ERM will automatically supply the pipeline with medical gas in the event of the primary system failing to supply.

The line pressure regulator should be set slightly lower than the primary supply pressure to prevent the ERM from feeding the pipeline during normal operation of the primary system.

1.2 1st Stage Pressure Regulator

For safe operation with regard to performance, mechanical strength, resistance to ignition in pure high pressure oxygen supply and cleanliness, the unit fully conforms to BS EN ISO 10524-2. A pressure relief valve connected to the regulator protects the downstream pressure and is set a 2000 kPa (20 bar).

1.3 2nd Stage Pressure Regulator

For safe operation with regard to performance, mechanical strength and contamination the unit fully conforms to BS EN ISO 10524-2, the second stage pressure regulator is a manually set diaphragm type and is used to set the system pressure to suit typical nominal values for 4, 7 and 11 bar pipeline systems.

1.4 Line Pressure Relief Valve

The line pressure relief valves are preset to the values shown in table 1 for the different distribution pressures.

Table 1: Relief Valve Set Points

Relief Valve Set Point	Nominal Distribution Pressure
530 kPa (5.3 bar)	400 kPa (4 bar)
1100 kPa (11 bar)	700 kPa (7 bar)
1300 kPa (13 bar)	1100 kPa (11 bar)

The line pressure relief valve is fitted between the pressure regulator and the isolation valve (just before the integrated non-return valve), thus protecting the delivery system from over pressurisation by discharging to atmosphere in the event of regulator failure.

1.5 Header Extension For Additional Cylinders

The ERM is suppled as standard with cylinder connections for a 2x1 manifold (1 cylinder per bank).

The ERM can be upgraded from a 2x2 to 2x6 manifold using the extension kits referenced in table 2.

Tabel 2 - Header extension kits

Gas Type	2x1	2x2	2x3	2x4	2x5	2x6
Oxygen	8102371280	8102371281	8102371282	8102371283	8102371284	8102371285
Nitrous Oxide	8102371286	8102371287	8102371288	8102371289	8102371290	8102371291
Entonox O2/N2O	8102371292	8102371293	8102371294	8102371295	8102371296	8102371297
Medical Air	8102371298	8102371299	8102371300	8102371301	8102371302	8102371303
Nitrogen	8102371304	8102371305	8102371306	8102371307	8102371308	8102371309
Carbon Dioxide	8102371310	8102371311	8102371312	8102371313	8102371314	8102371315

Modular Header Rack Assembly 2X1

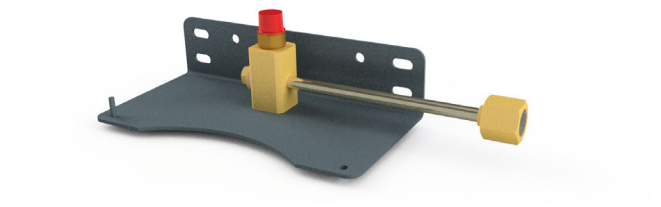

Modular Header Rack Assembly 2X2

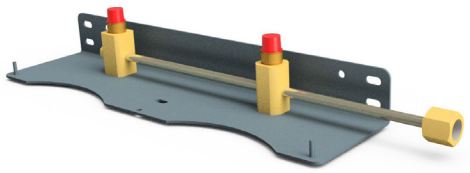

Modular Header Rack Assembly 2X3

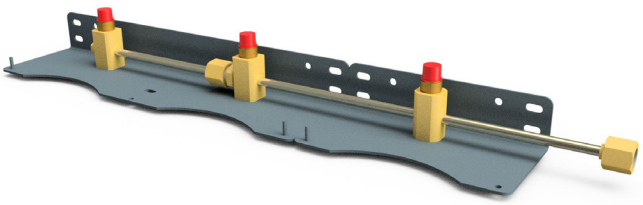

Modular Header Rack Assembly 2X4

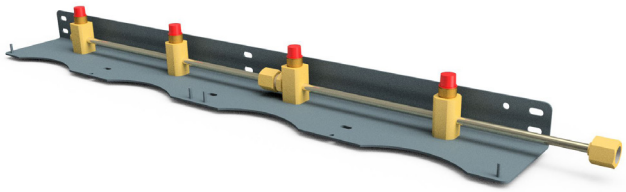

Modular Header Rack Assembly 2X5

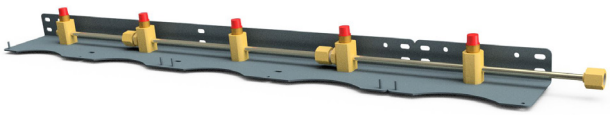

Modular Header Rack Assembly 2X6

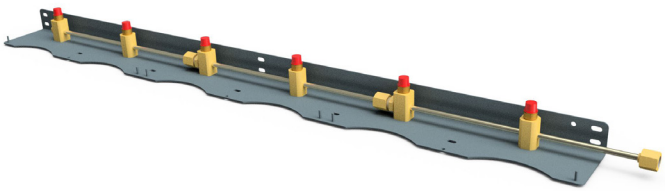

1.6 Halogen Free Components

The ERM contains NO HALOGENATED polymers located in the gas stream that may experience pressurised oxygen in excess of 3000 kPa (30 Bar) in normal operation or single fault condition, as recommended for safe practise of the medical gas pipeline system.

2. Installation

2.1 Installation procedure for Panel.

⚠ CAUTION: Ensure no contaminates, oil or grease come into contact with any of the gas connection/internals.

2.1.1 Unpack and inspect all items for damage.

2.1.2 Check wall for suitability.

⚠ CAUTION: Supplied fixings are for use with solid masonry walls only. Alternative fixing types are not suppled with the unit. For securing to alternative wall types, ensure that wall structure and selected fasteners are suitable for supporting the 16 kg weight of the ERM.

2.1.3 Identify the centre position of the ERM on the wall and mark.

2.1.4 Drill wall and fit wall plugs. Screw the ERM to the wall, checking that it is firmly attached. See **figure 3 & 4** for typical mounting heights.

2.1.5 Loosely connect the supplied ø22mm OD stub pipe (Item 12, **figure 1**) to the main pipeline isolation valve (Item 9, **figure 1**). Do not fit the O'ring seal till after brazing.

2.1.6 Braze the pipework using the fluxless brazing technique with nitrogen purge.

⚠ CAUTION: Ensure the brazed connection point is isolated from any other pipeline source of supply.

2.1.7 Undo the securing nuts on the stub pipes and insert the 'O' ring supplied into the connection grooves and tighten.

Figure 3 - Typical Installation For Use With 'J' & 'G' Type Cylinder

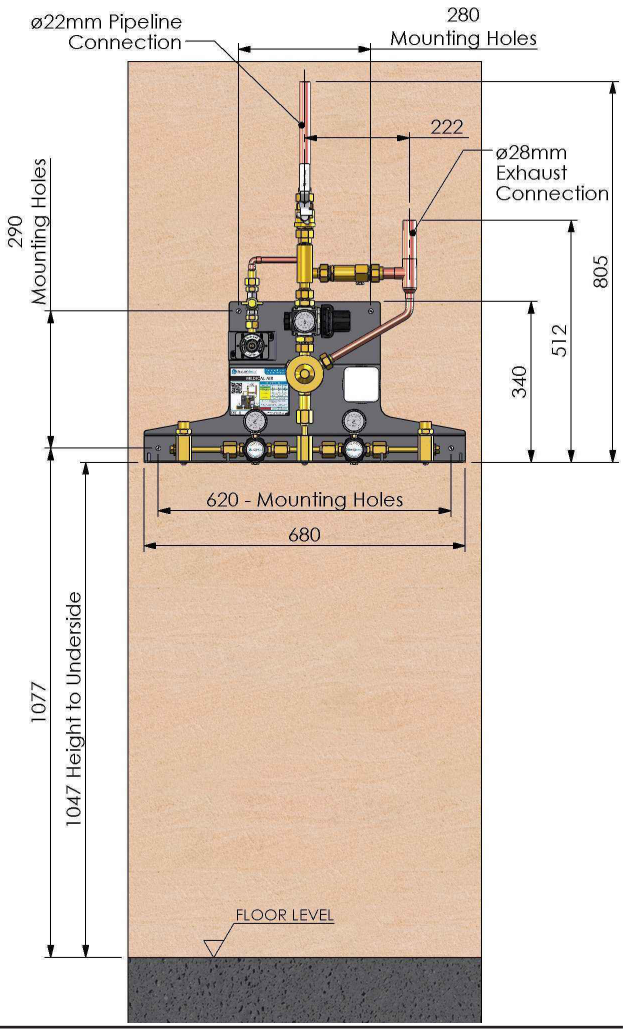

⚠ CAUTION: Supplied fixings are for use with solid masonry type walls only. Typical ERM weight is 16kg.

Note - 'J' type cylinders typically for Oxygen and Medical Air.'G' type cylinders typically for Nitrous Oxide and N2O/O2 mix (Entonox).

2.1.8 The pipework should be secured to the wall using munsen rings (not supplied). It would be recommended to fit the first pipe support to the supplied ø22mm OD stub pipe (Item 12, **figure 1**). The next support should typically be fitted within 2m of the first.

2.1.9 The ø28mm exhaust line (Item 13, **figure 1**) shall be brazed using fluxless brazing technique with nitrogen purge.

⚠ CAUTION: The ø28mm exhaust line (Item 13, figure 1) needs to be piped away from the manifold room to a safe location to prevent buildup of waste gas in an enclosed space in the event of a regulator failure.

⚠ CAUTION: Do not reduce the diameter of the pipe used for the exhaust line.

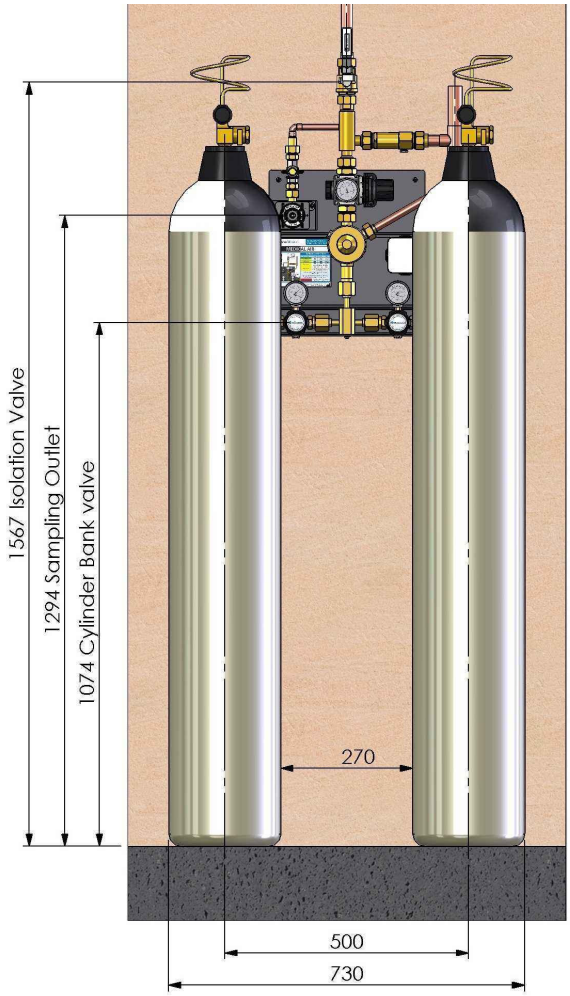

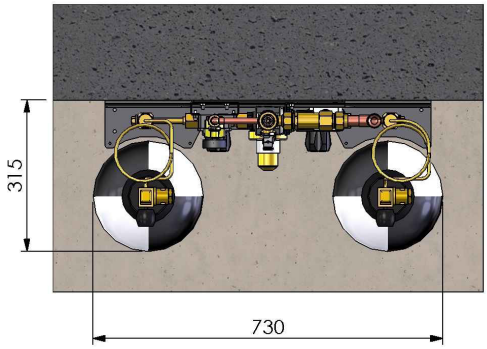

Figure 4 - Typical Installation For use with 'VF' Type Cylinders

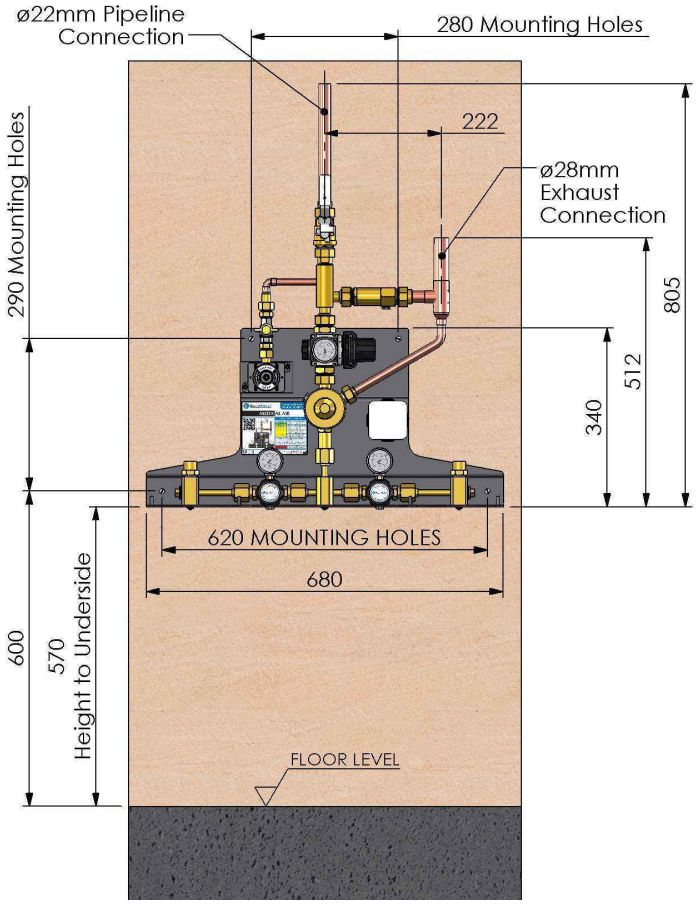

⚠ CAUTION: Supplied fixings are for use with solid masonry type walls only. Typical ERM weight is 16kg.

Note - 'VF' size cylinders typically used for CO2

Figure 5 - Reserve Low Alarm Wiring

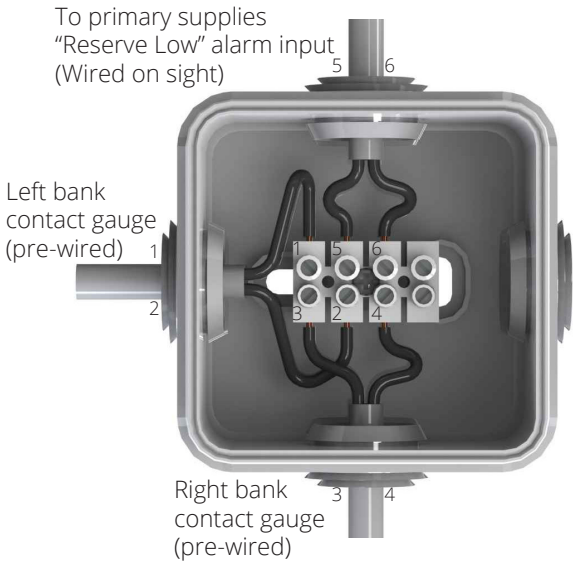

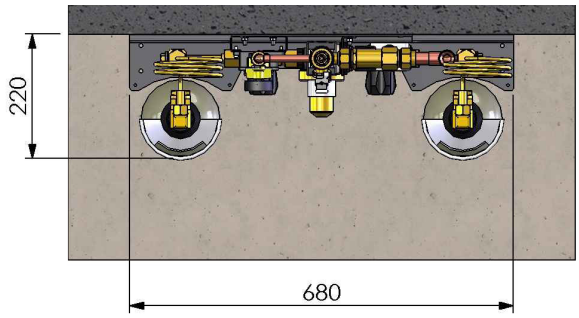

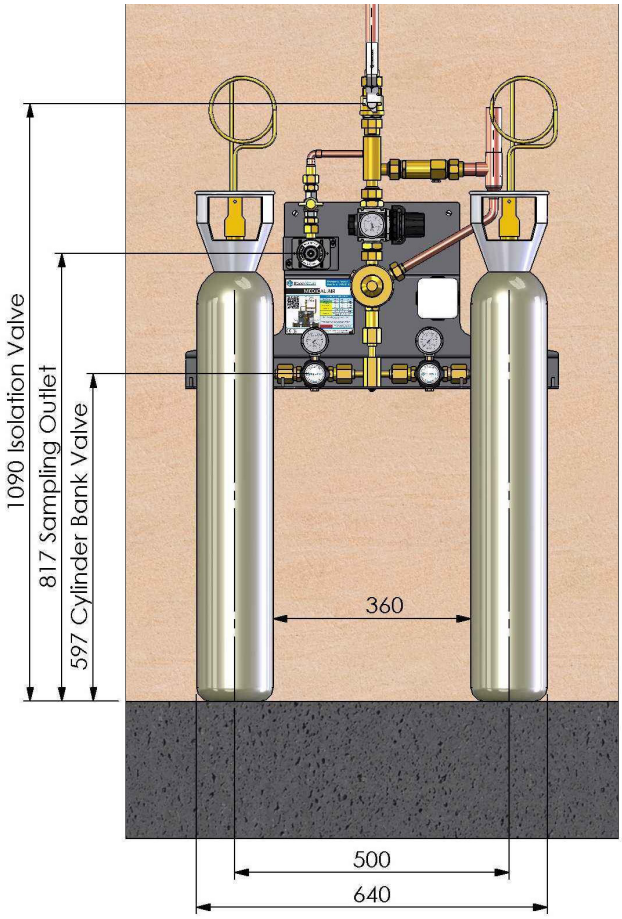

2.2 "Reserve Low" alarm wiring.

2.2.1 Use a flat bladed screw driver to pop the terminal cover at the corners.

2.2.2 Wire the reserve low alarm as shown in figure 5. (Left and right bank contact gauges are pre-wired)

2.3 Installation procedure for Modular Manifold Header.

⚠ CAUTION: Ensure that all the header rails supplied are the correct gas type. The gas ID is stamped onto the flat section of the NRV caps.

2.3.1 Cylinder Header Extension Kits (upgrade to 2x2 manifold). See figure 6 and 7.

2.3.1.1 Remove the 3/8" BSP blanking plug and bonded seal from the end of the header block and fit 3/8" x 5/8" BSP fitting (supplied with kit) complete with O-ring seals for connection of the extension header.

2.3.1.2 Offer cylinder support rack up to the header rail and secure using the M6 x 16 hex head set screws and flange nut supplied with the extension kit.

2.3.1.3 Secure the previously fitted 5/8" connector to the extension header.

2.2.1.4 If no more header extensions are to be fitted, blank off the end of the header with the 3/8" BSP plug and bonded seal that was removed in step 2.3.1.1.

2.3.1.5 Mark and drill the optional extension bracket wall mount if required. Fit the wall plug and secure with the No. 10 pan head supplied with the kit.

⚠ CAUTION: Supplied fixings are for use with solid masonry type walls only. Typical extension bracket is 1.5kg per side.

Figure 6 - Cylinder header extension fitting details (upgrade to 2 x 2)

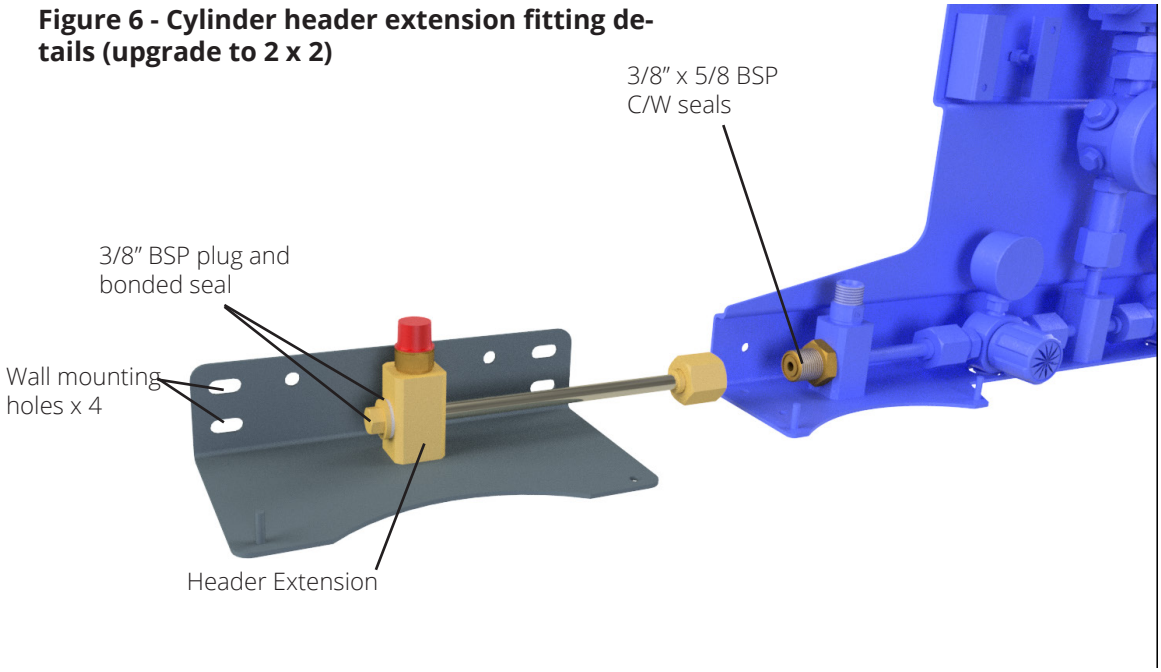

Figure 7 - Typical cylinder header extension layout details (upgrade to 2 x 2), extension kits from table 2.

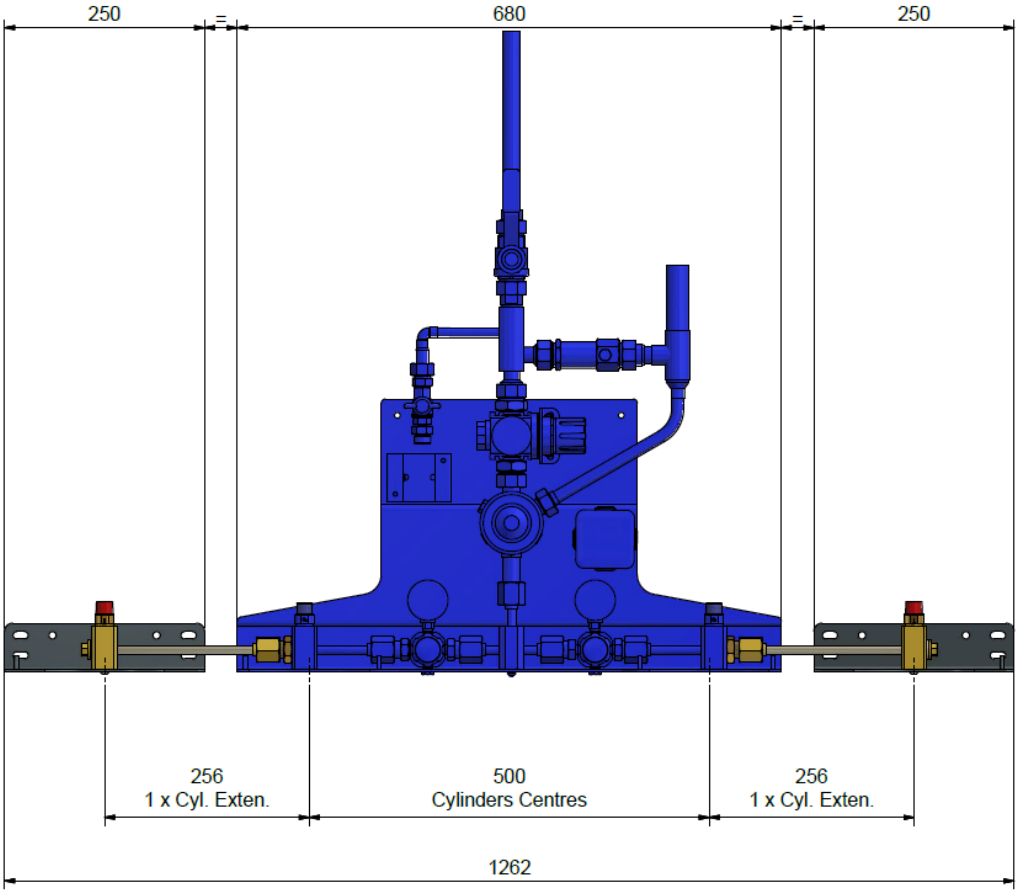

2.3.2 Additional Cylinder Header Extensions (upgrade to 2 x 3 plus manifold). See figure 8 to 12.

⚠ CAUTION: Ensure that all the header rails supplied are the correct gas type. The gas ID is stamped onto the flat section of the NRV caps.

2.3.2.1 Remove the 3/8" BSP blanking plug and bonded seal from the end of the header block and fit 3/8" x 5/8" BSP fitting (supplied with kit) complete with O-ring seals for connection of the extension header.

2.3.2.2 Line up the header connection, mark mounting hole positions and drill. Fit the wall plug and secure with the No. 10 pan head supplied with the kit.

2.3.2.3 Secure the previously fitted 5/8" connector to the extension header.

2.3.2.4 Repeat 2.3.2.1 & 2.3.2.3 for any additional header extensions.

2.3.2.4 If no more header extensions are to be fitted, blank of the end of the header with the 3/8" BSP plug and bonded seal that was removed in step 2.3.2.1.

⚠ CAUTION: Supplied fixings are for use with solid masonry type walls only. Typical extension bracket is 2.5kg per side.

Figure 8 - Cylinder header extension fitting details (upgrade to 2 x 3 plus)

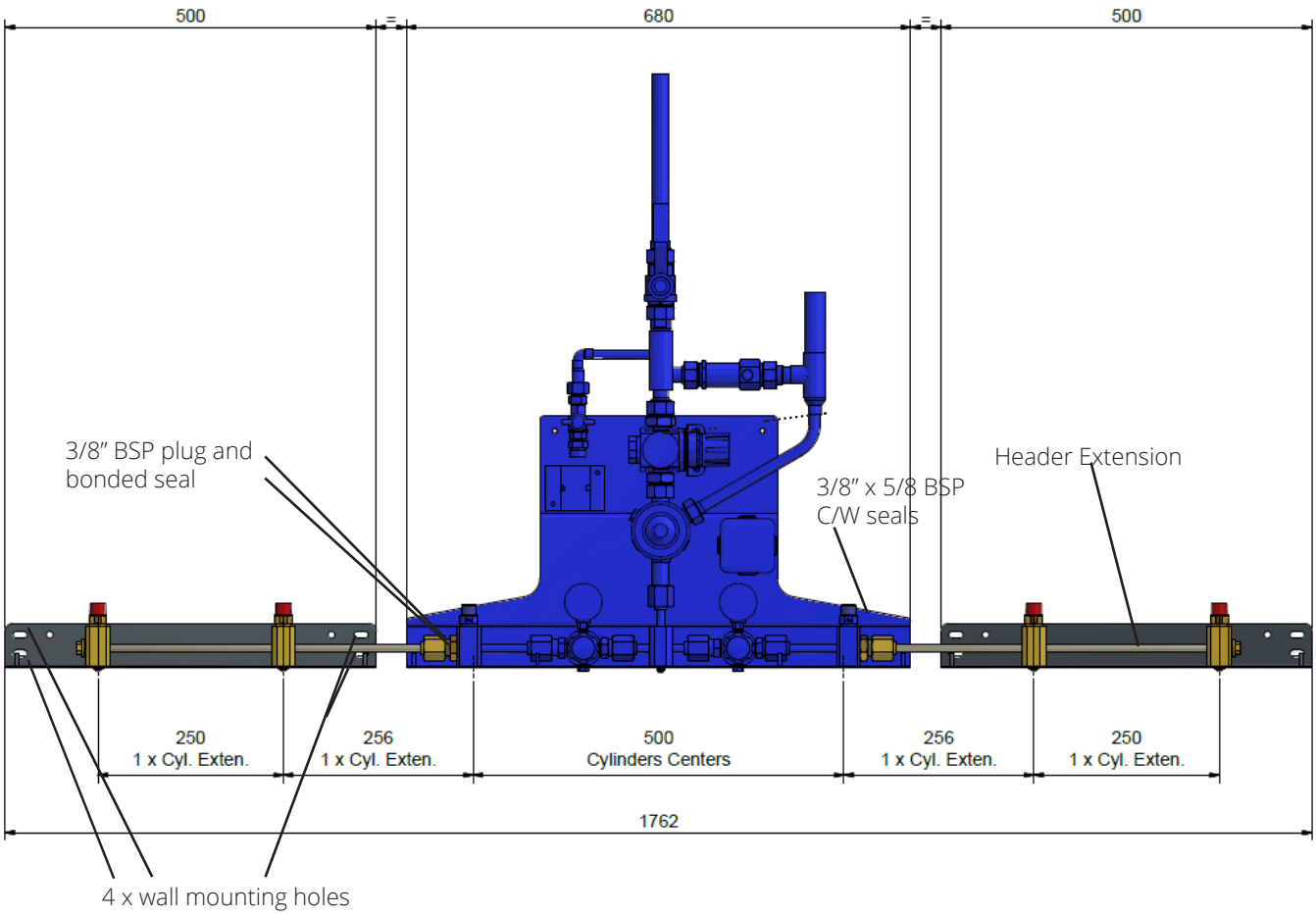

Figure 10 - Typical cylinder header extension layout details (upgrade to 2 x 4), extension kits from table 3.

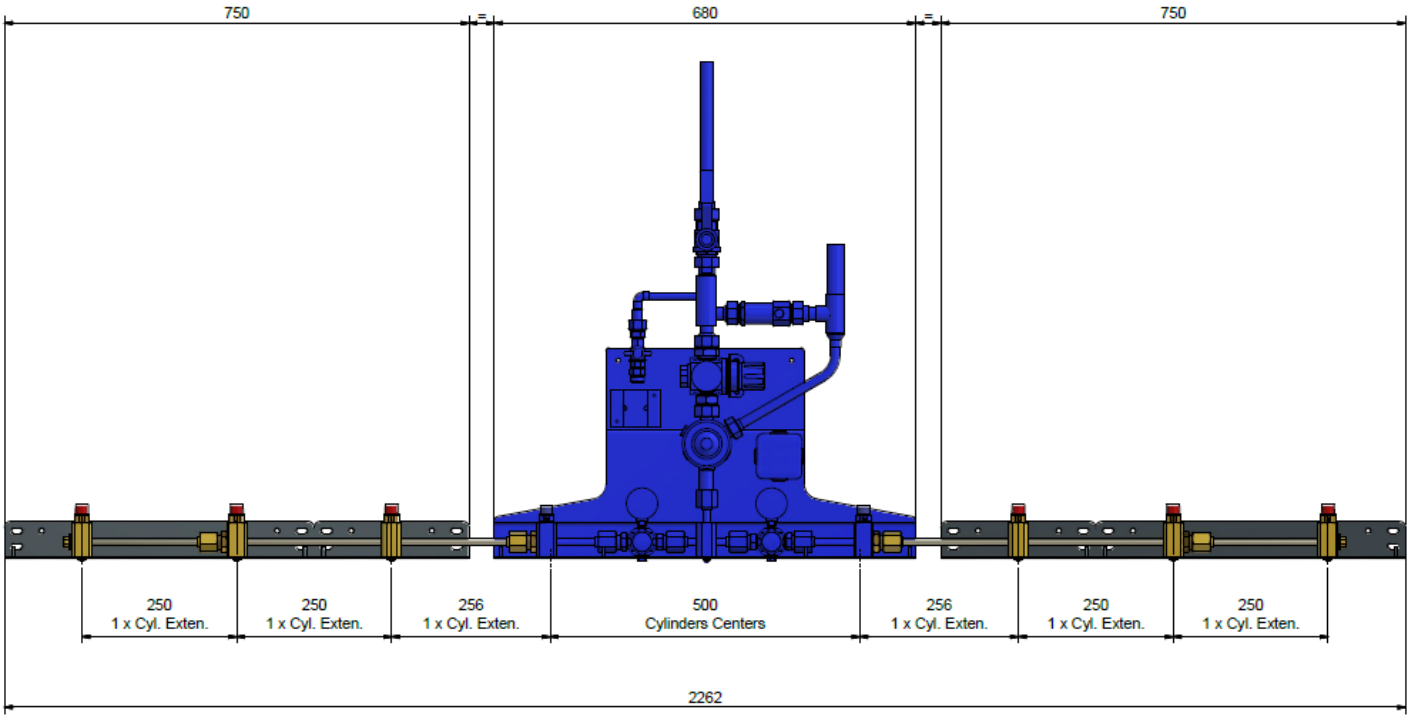

Figure 11 - Typical cylinder header extension layout details (upgrade to 2 x 5), extension kits from table 3.

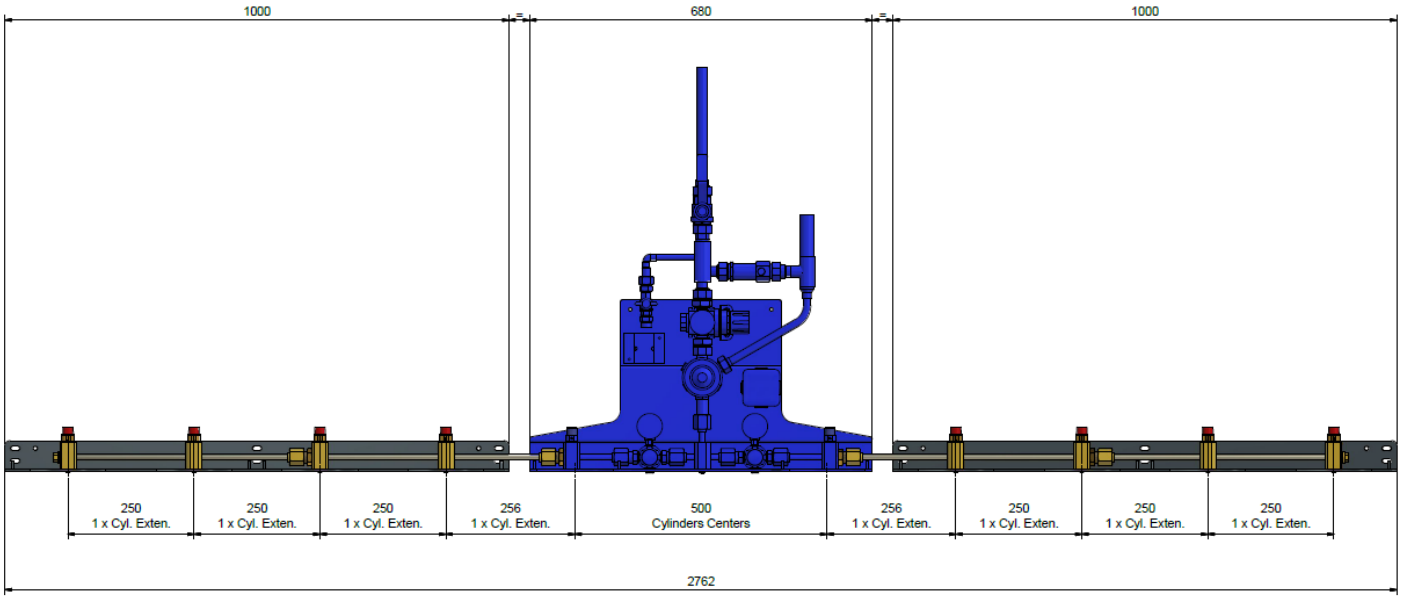

Figure 12 - Typical cylinder header extension layout details (upgrade to 2 x 6), extension kits from table 3.

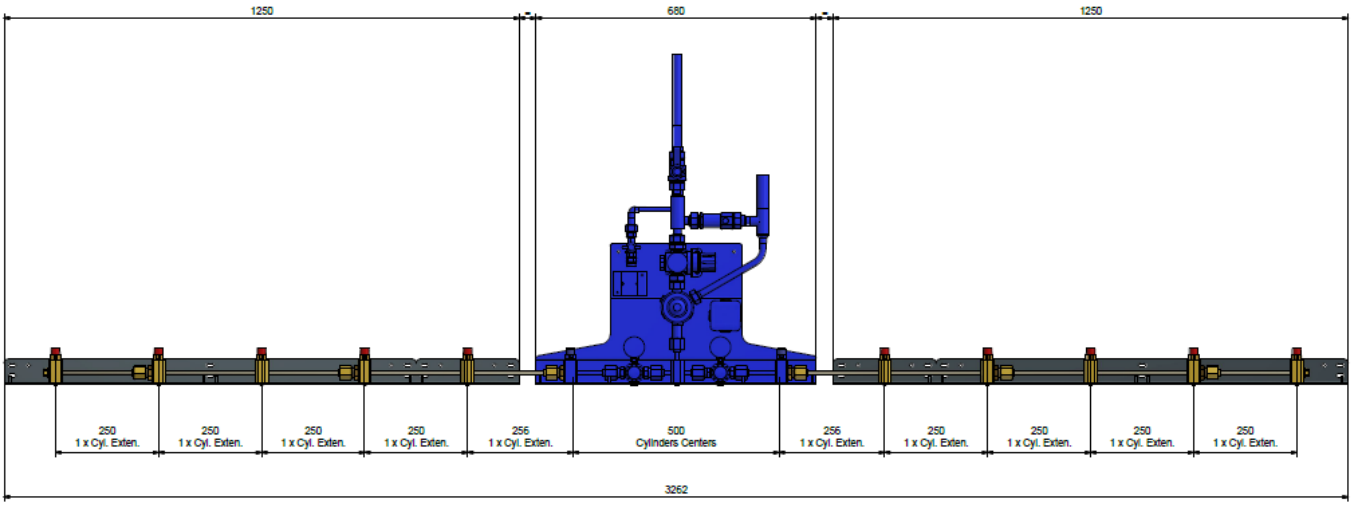

NOTE - For additional cylinders continue to add the dimensions of the last header kit from either figure 9 or 10 for either single or double racks.

2.4 Cylinder Connection

⚠ **CAUTION: Ensure that all the tailpipes supplied are the correct gas type. The gas ID is stamped onto the nut that connects to the header non-return valve.**

2.4.1 Connect the tailpipes to the non-return valves on the header racks as shown in **figure 13**.

2.4.2 Refer to hospitals/site policy for safe cylinder handling (See section 4.6 for typical cylinder handling safety check list), move the cylinders into place (see **figures 3, 7, 9-12**) ready for connection to the tailpipes.

⚠ **CAUTION: Only persons who have had specific training in the safety of medical gases, manual handling techniques and cylinder changing procedures should be allowed to change cylinders on medical gas manifolds or medical equipment.**

2.4.3 Connect the cylinders to the pin indexed clamp on the tail pipe, as shown in figure 13. Ensure the bodok seal is in place at the opposite side to the thumb screw on the pin index clamp before connection.

NOTE - Pipe index tailpipes to BE EN ISO 21969 are supplied as standard. Alternative connection types are available on request.

2.4.4 See section 4.7 for cylinder operation procedure

2.5 Installation check

2.5.1 Ensure that all tailpipes are connected to the cylinders and manifolds on both sides and that the restraint chains are secure around the cylinders.

2.5.2 Isolate the panel from the pipeline using isolation valve 'B' (shown in **figure 1**).

2.5.3 Ensure that the left-hand bank high-pressure isolation Valve '1' (**Figure 1**) is fully open by turning anticlockwise, and the right-hand high-pressure isolation valve '2' (**Figure 1**) is fully closed by turning clockwise.

2.5.4 Using 1 cylinder, slowly pressurise the left-hand bank (see section 4.7 - Cylinder operation). The left-hand contents gauge should indicate full cylinder pressure. The distribution system pressure gauge on the regulator (adjust as necessary) should read typically as per table 4 (Section 4 - Principle of Operating).

⚠ **CAUTION: It would be recommended to set the ERM line pressure at least 0.2 bar below the main supply source pressure at full design flow to ensure the emergency manifold does not supply the pipeline during normal primary source operation.**

2.5.5 Check for leaks. Now ensure all left-hand bank cylinders are closed.

2.5.6 Open valve 'C' and relieve the pressure from within the ERM from the sampling outlet then close valve 'C' (Item 10 & 11, **Figure 1**).

2.5.7 Repeat the 2.6.3 to 2.6.6 for the right-hand cylinder bank.

2.5.8 Check the reserve low alarm is connected as shown in figure 5.

2.5.9 The installation must now be purged as per HTM 02-01 for UK installations, or as per relevant standards if installed outside the UK.

Figure 13 - Typical tailpipe and cylinder connection

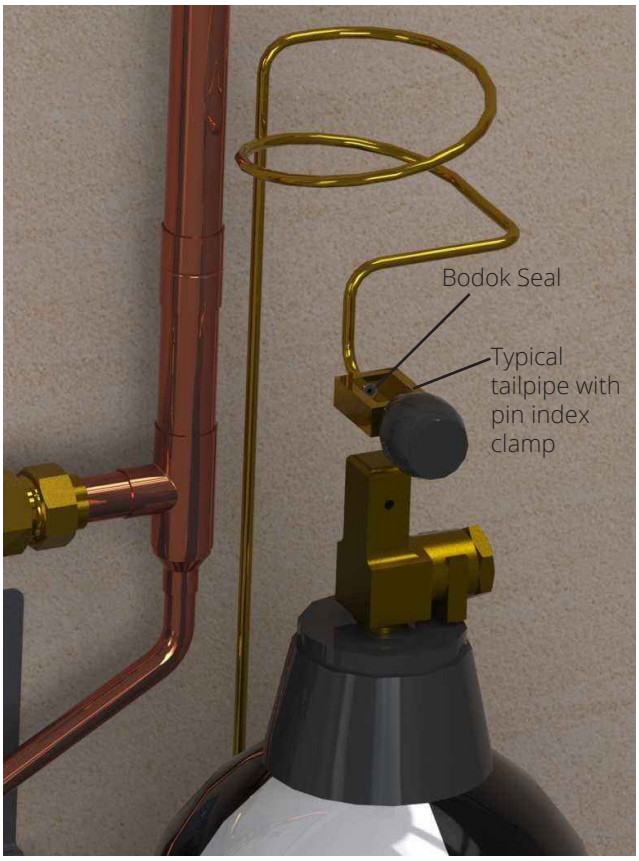

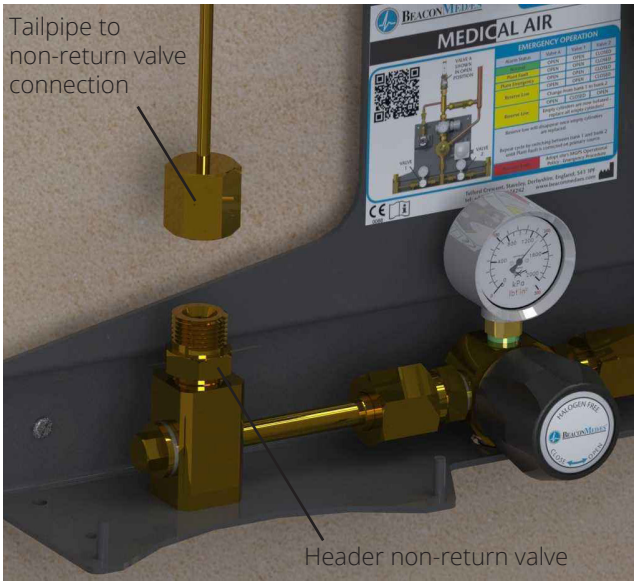

3. Commissioning

3.1 General

Commissioning of the ERM must be carried out in full after initial installation. The object of the commissioning procedure is to ensure that all components are serviceable and that the overall system is operable and set to the correct distribution pipeline pressure. Suitably qualified competent personnel who are familiar with this manual must only undertake commissioning of the ERM.

3.2 Preparation

3.2.1 Ensure that all tailpipes are connected to the cylinders and manifolds on both sides and that the restraint chains are secure around the cylinders.

3.2.2 Ensure that the outlet pipe from the ERM is connected to the distribution system of the same gas service, downstream of the main supply unit and isolation valve 'A' (shown in **figure 2**).

3.2.3 Ensure that the ERM isolation valve 'B' (shown in **figure 1**) is fitted and in the closed position.

3.2.4 Open all cylinder valves on the ERM.

3.2.5 Fully open the high-pressure isolation valves 1 and 2 (shown in **figure 1**).

3.2.6 Check connections on the headers, tailpipes, regulator and associated pipework for leaks.

3.2.7 Fully close the right-hand high-pressure isolation valve 2 (**figure 1 & 2**).

3.3 Pressure Checks

3.3.1 Ensure that full gas cylinder pressure is shown on the cylinder contents gauges (Fitted to valve 1 & 2, see figure 1).

3.3.2 With Valve 'B' closed and valve 'C' open, exhaust a quick blast of gas from the sampling outlet, close valve 'C'. Check that the pressure on the pipeline distribution pressure gauge is typically as per table 4. Adjust as necessary.

Note...For reducing the pressure set point, ensure valve 'B' is closed and sampling outlet isolation valve 'C' is open. Gently bleed the gas from the sampling outlet while making adjustments, as the regulators is a none relieving type. Always leave valve 'C' closed when finished.

3.3.3 Check that the line pressure does not vary outside of the requirements of the installation (see table 4, Section 4 - Principle of Operating, for typical values).

3.3.4 Complete the steps in section 4.2 - Procedure to prime ERM, to bring the ERM online.

4. Principles of Operation

4.1 General

The ERM line pressure is set below the normal operating range of the primary supply. While the primary supply is functioning within it's design limits, the ERM will not feed gas into the pipeline. If the primary supply fails, causing the pipeline pressure to fall to the ERM's set point it will automatically start feeding gas to the pipeline.

Table 3: Typical pressure settings for HTM02-01 primary and emergency medical gas supply system, during normal pipeline system operation.

	Pressure (Bar)		
Nominal System Design	4	7	11
Max. Static Pressure Primary Supply	4.6	8.2	11.5
Min. Dynamic Pressure Primary Supply	4.2	7.4	10.3
Max. Static Pressure ERM	4.0	7.2	10.0
Min. Dynamic Pressure ERM	3.5	6.5	9.0

Note - Table 4 shows typical examples. These figures may differ depending on the hospital's pipeline management policy.

⚠ CAUTION: It would be recommended to set the ERM line pressure at least 0.2 bar below the main supply source pressure at full design flow to ensure the emergency manifold does not supply the pipeline during normal primary source operation.

The recommended setup of the ERM is to have the left hand bank open and ready to come online and the right hand bank closed.

In the event of the primary system failing to supply (Awareness of the Primary supply failure is typically from central alarm system) the ERM line regulator (see **figure 1**) can be manually increased to match the primary supply's nominal values, so that the full distribution pressure is restored.

When the ERM is in operation there is provision for an alarm output to warn when the running bank contents is typically below half. The ERM contents gauge should then be locally monitored. The Bank valves can be used to cycle the left and right banks allowing for empty cylinders to be changed while keeping continues supply to the pipeline.

⚠ **CAUTION: The following procedures 4.2 to 4.7 are only typical guides, where there are conflicts with the hospital's emergency procedure, the hospital's policies will take precedence.**

4.2 Procedure to prime ERM.

4.2.1 The following procedure must be carried out once the commissioning (section 3) is complete and the system is ready to be put into use.

4.2.2 Ensure the high-pressure isolation valve on the left-hand bank is fully open, the right-hand bank isolation valve is closed, and all cylinder valves on both banks are fully closed. Correct as required, see section 4.7 Cylinder Operation.

4.2.4 Ensure the connecting pipeline is ready for use. Slowly open the line valve 'B' (Item 9, **figure 1**).

4.3 Procedure when mains supply fails.

4.3.1 The following steps relate to **figure 1 & 2**, and detail how to operate the ERM in the event of the main supply system failing to supply gas at the correct distribution pressure.

4.3.2 Ensure the ERM line valve 'B' is open. Close main supply line valve (Shown as valve 'A' in **figure 2**).

4.3.3 Ensure that one of the high-pressure bank isolation valve is fully open, the other bank isolation valve is closed, and all cylinder valves on both banks are fully closed. Correct as required.

4.3.4 The pressure regulator will be set below the nominal distribution system pressure. This should now be increased to the full distribution pressure by increasing the line regulator setting, until the correct distribution pressure can be obtained.

4.3.5 Once the ERM is in operation there is provision for an alarm output to warn when the running bank contents is typically below half. The ERM contents gauge should then be locally monitored for cycling the cylinder banks for continuous supply (see section 4.4 for bank cycling procedure).

4.4 Procedure to cycle banks & changing cylinders.

4.4.1 Refer to hospitals/site policy for safe cylinder handling (See section 4.6 for typical cylinder handling safety check list) when moving the cylinders into place ready for connection to the tailpipes.

4.4.2 When the running bank pressure falls to the pressure for changing cylinder (for typical changeover pressures see table 5). Slowly open the standby bank isolation valve (**see figure 1**). With the standby bank now operating as the running bank, close the high pressure isolation valve and cylinder valves for the empty cylinder bank.

Table 4: Typical cylinder bank changeover pressure.

Nominal Supply pressure	Typical Cylinder changeover
4 Bar	15 Bar (50 Bar Cyl. and Below)
4 Bar	20 Bar (137 Bar Cyl. and above)
7 Bar	30 Bar
11 Bar	30 Bar

Note - Values in table 5 are only for reference as a typical guide, refer to hospital emergency procedure policy.

4.4.3 For the empty cylinder/s disconnect the tailpipe from the cylinder (see **figure 13**) by either undoing the handwheel or unscrewing the nut at the cylinder end, depending on the cylinder connection type.

4.4.4 Replace the empty cylinder/s and reconnect the tailpipes. Slowly open the cylinder valves (see section 4.7 - Cylinder operation.

4.4.5 Repeat this section each time the running bank drops to the changeover pressure until the main supply is fully operational.

4.5 Procedure to reinstate main supply.

4.5.1 The following steps detail how to reinstate the mains supply once it has been returned to normal operation.

4.5.2 Slowly open valve 'A' (See **figure 2**).

4.5.3 Complete the steps in section 3, followed by 4.2

4.6 Typical Cylinder Handling Checklist

⚠ **CAUTION: Only persons who have had specific training in the safety of medical gases, manual handling techniques and cylinder changing procedures should be allowed to change cylinders on medical gas manifolds or medical equipment.**

- Safety shoes should be worn at all times. When moving larger cylinders, wear heavy protective gloves (preferably textile or leather). Keep all items clean and grease/oil free.
- Do not smoke or use naked lights.
- When handling smaller cylinders, the use of protective gloves may be inconvenient. Extra care should be taken to avoid injury and to make sure that hands are free from oil or grease BEFORE the cylinders are handled.
- Do not knock cylinders against each other or other solid objects.
- Do not drop or drag the cylinders.
- Do not use cylinders as rollers or wheel chocks.
- Do not lift any cylinder by its valve or cap
- Use appropriate trolley for larger cylinders.

4.7 Cylinder Operation

⚠ CAUTION: Undue force should not be used to open or close cylinder valves, or to attach connectors to cylinders.

⚠ CAUTION: ALL cylinder valves should be opened gently. TAPPING the operating key GENTLY with a soft-faced (copper) mallet is acceptable but undue force should not be used. If it is obvious that injury or damage could arise from trying to open a sticking valve, the cylinder should be removed from service and returned to the supplier as a faulty cylinder.

⚠ CAUTION: Opening cylinder valves SLOWLY will prevent a sudden rise in pressure in the system. It is at this time when there will be most stress on components and when most explosions will occur due to adiabatic compression of any oil or grease that may be present.

4.7.1 The cylinder valve should be FULLY opened (slowly, anticlockwise) using the appropriate cylinder key or handwheel where fitted and then turned clockwise a quarter turn.

⚠ CAUTION: If there is any leakage of gas the cylinder should be removed from service and returned as faulty. DO NOT attempt to tighten gland nuts etc, as this may cause damage to the valve.

4.7.2 To close the valve, turn the spindle or handwheel clockwise. Hand pressure only should be used to close the valve.

5. Maintenance Procedures

A competent person who is conversant with the maintenance of high-pressure medical gas installations and any special national conditions, which may apply, must carry out all maintenance. Preventative maintenance contracts are available from **BEACONMEDÆS** for installations within the U.K., overseas distributors will be able to supply similar contracts in other areas.

⚠ **WARNING: OBTAIN A WORK PERMIT (OR EQUIVALENT FOR OVERSEAS) BEFORE COMMENCING ANY WORK ON A MEDICAL GAS INSTALLATION.**

5.1 Daily Inspection

5.1.1 Check visual indicators for correct function and damage.

5.1.2 If the ERM is observed to be in operation on its “emergency reserve” bank, replacements for empty cylinders should be made available immediately.

5.1.3 Check manifold pressure gauges for abnormal conditions.

5.1.4 Check ERM for unusual noises or vibrations.

5.2 Weekly

5.2.1 Check that all cylinders are properly secured and that batch labels are correct and in date.

5.3 Quarterly

5.3.1 Ensure that:

(a) when the duty (primary) manifold is running the reserve (secondary) manifold cylinders are full;

(b) all system pressures are normal;
(c) all alarms are showing “green” normal lamps;
(d) the automatic manifold main isolating valve is open; and
(e) the manifold is supplying the hospital.

5.3.2 Close the isolating valve on the ERM slowly and confirm that there is no effect on the line pressure to the hospital.

5.3.3 Open all cylinder and header high-pressure isolating valves.

5.3.4 Check that the ERM safety valves are not passing, by disconnecting their downstream exhaust coupling and inspecting for a gas leak and check the condition of the seals (See **figure 14**). Replace the valve or seals as necessary. Reconnect the exhaust pipework, ensure the O-ring seals correctly in place.

Figure 14 - Relief Valve Inspection

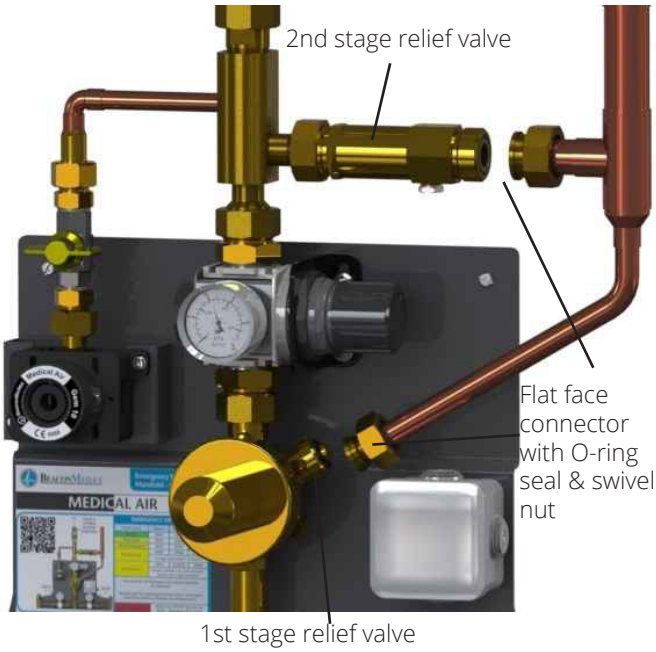

5.3.5 Close one cylinder valve and disconnect the tailpipe at the cylinder end (see **figure 15**). Listen for a leak from the tailpipe. A minor leak is permissible and likely but an obvious major leak denotes failure of the manifold non-return valve (NRV). If the latter happens, do not totally detach the tailpipe but instead retighten it and test other tailpipes in the same way. Any failed NRV’s can be replaced (see section 6.8) after all cylinder valves have been closed and the system has been depressurised. Repeat this test when the new NRV’s have been fitted (See **figure 15** and section 4.7 - Cylinder Operation).

Figure 15 - Manifold header Non-Return Valve Inspection.

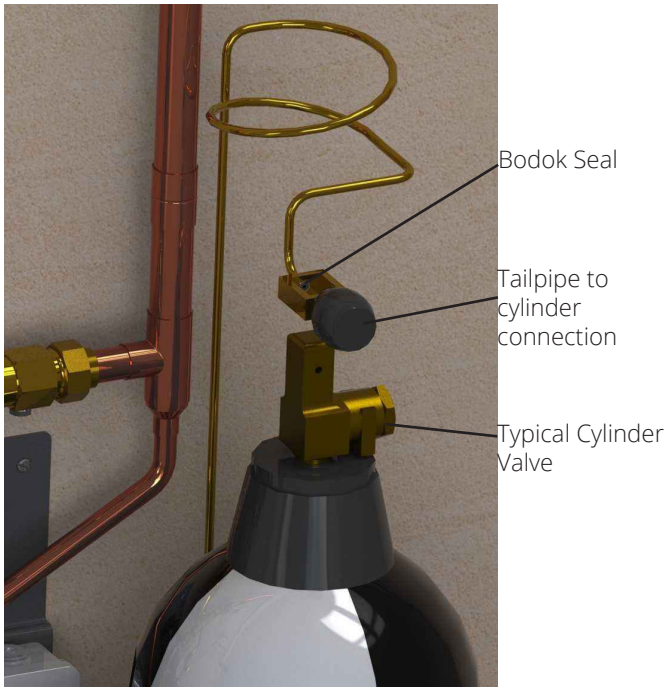

5.3.6 Ensure the line valve ‘B’ is closed and one cylinder and bank valve on 1 side of the ERM is open (see **figure 1**). Open Valve ‘C’ and probe the sampling outlet to produce a steady flow and check the pressure on the line gauge does not dip by more than 10%. If possible attach a flowmeter to the sampling outlet and pipe away to a safe location while performing this test. Close valve ‘C’ when finished.

⚠ **CAUTION: For anaesthetic and oxygen manifolds ensure that the manifold room is well ventilated and no potential ignition sources are present while running this test. Run this test for as short a time as possible. Oxygen can be absorbed into clothing etc., so once the test is complete it would be recommended to spend at least 20 minutes out doors to ensure the oxygen has released. During this time stay away from naked flame, do not smoke etc. Do not perform this test unless the risks can be kept within an acceptable level.**

5.3.7 Check the static pressure of the regulator (should be typically as per table 4 in section 4). Observe this pressure for typically 10-20 minutes to ensure that there is no regulator creepage. Excessive creepage will necessitate replacement (see section 6.3) and a repeat of this test.

5.3.8 To test the “reserve low” contact gauge, open one cylinder/header isolating valve until the cylinder content gauge indicates full pressure, and then close the valve.

5.3.9 Open Valve 'C' and carefully bleed gas from the sampling outlet.

5.3.10 Observe the falling pressure on the contact gauge.

5.3.11 When the pressure falls to 14 bar for 100 bar scale, and 68 bar for the 315 scale gauges the contact will provide an open signal, initiating a "Reserve Low" alarm on the primary alarm system. Should this not occur replace the contact gauge (See section 6.10).

5.3.12 Repeat steps 5.3.8 to 5.3.11 for the opposite contact gauge. Close valve 'C' when finished.

5.3.13 Finally, tighten all joints, open all cylinder valves and perform a leak test on all joints.

5.3.18 Perform the steps in section 4.2 - Procedure to prime ERM.

5.3.19 The ERM is now ready for use.

5.4 5 Years

Replace the pressure safety valve for a new certified relief valve, see sections 6.4 & 6.5.

5.5 As Required

Replace tailpipes, pressure safety valve, pressure regulator, high-pressure isolation valve, isolation valves, contact gauges, non-return valve etc. as and when required (see section 6.0 to 6.10).

6.0 Component Replacement Procedures

⚠ WARNING: IT IS ESSENTIAL THAT ONLY GENUINE BEACONMEDÆS SPARE PARTS ARE FITTED DURING MAINTENANCE.

⚠ CAUTION: Ensure no contaminates, oil or grease come into contact with any of the gas connection/internals.

Preparation For Component Replacement

6.0.1 Ensure the main gas supply system is functioning correctly and supplying the pipeline.

6.0.2 Close the ERM line isolation valve 'B' (See **figure 1**). Close all the cylinder and open both bank valves (see **figure 1 and 2**).

6.0.3 Open the sampling outlet valve 'C', and probe the outlet to depressurise the system.

⚠ CAUTION: When exhausting anaesthetic and oxygen manifolds ensure that the manifold room is well ventilated and no potential ignition sources are present.

Note - If the cylinder contents gauges are not rapidly dropping in pressure, stop draining the system and check all cylinders are correctly isolated.

6.1 Replace line non-return valve (P/N: 2005778)

6.1.1 Complete steps in section 6.1 before carrying out any component replacement on the ERM.

6.1.2 Slowly turn the swivel nut of the top 1" connection. If the you hear gas escaping do not fully unscrew the joint until the system is fully drained.

6.1.3 Fully disconnect all 4 joints as shown in figure 16 and gently remove the unit by sliding it towards you. Take care not to damage the seals.

6.1.4 Inspect the existing seals and replace if required, see figure 16 for seal part numbers.

6.1.5 Taking care not to damage the O-ring seals replace the new non-return valve as shown in figure 16, and fasten the 4 flat face joints.

6.1.6 Follow steps in section 6.11 bring the ERM back online.

Figure 16 - Line Non-return Valve Replacement

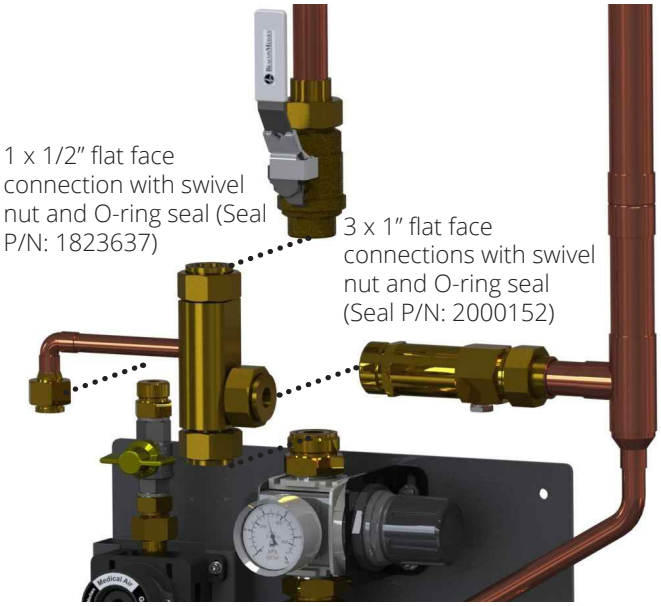

6.2 Replace Sampling Outlet (See table 6 for part numbers)

Table 5 : Sampling Outlet Part Numbers

GAS Type	1st Fix	2nd Fix
Oxygen (O2)	2005810	1826850
Nitrous Oxide (N2O)	2005811	1826851
Oxygen/Nitrous Oxide (O2/N2O)	2005812	1826852
Medical Air	2005813	1826853
Surgical Air	2005814	1826854
Nitrogen (N2)	2005816	2004835
Carbon Dioxide (CO2)	2005815	2004836

6.2.1 The Sampling outlet can be worked on without taking the ERM off line.

6.2.2 Ensure the sampling outlet isolation valve 'C' is closed (as shown in **figure 17**).

Figure 17 - Sampling Outlet Replacement

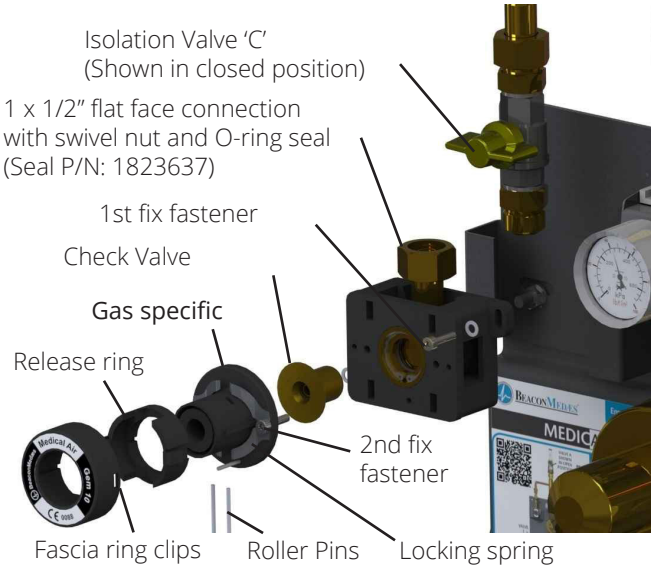

6.2.3 Probe the outlet to depressurise.

6.2.4 To replace the whole outlet, disconnect the 1/2" connection and remove the 2 x M4 cap head set screws. Ensure the replacement unit is the correct gas type. Replace the new outlet by connection the 1/2" connection ensure the O-ring is in place (Replace if damaged, see **figure 17** for part number. Secure the unit with the M4 cap head and washers.

6.2.5 For replacing the 2nd fix only (see **figure 17**). Press the fascia ring clips shown and slide it from the release ring. Press the release ring, compressing the locking spring until the roller pips fall out. Remove the 2nd fix fasteners and slide of the 2nd fix and check valve capsule.

Fit the new check valve, gas specific socket and locking spring. Secure in place with the 2nd fix spring. Ensure the spring can be compressed without catching the sides of the gas specific socket, adjust as required. Fit the release ring and compressing the locking springs till the roller pins can be fitted, then release. Fit the fascia ring so that the clips are secured.

6.2.6 After replacing the sampling outlet (entire outlet or just the 2nd fix) probe the outlet to ensure the locking mechanisms functions correctly.

6.2.7 Open valve 'C' and check for leaks. If leaks are found, before attempting to rectify close valve 'C' and probe the outlet to depressurise. Repair the leak and repeat steps in 6.2 as required.

6.2.8 Close valve 'C' when replacement complete.

6.3 Replace 2nd stage regulator (See table 7 for part numbers)

Table 6: 2nd Stage Regulator Part Numbers

Regulator Nominal Pressure	Part Number
4 Bar	2005689
7 Bar	2005690
11 Bar	2005691

6.3.1 Complete steps in section 6.1 before carrying out any component replacement on the ERM.

6.3.2 Slowly turn the swivel nut of the top 1" connection. If the you hear gas escaping do not fully unscrew the joint until the system is fully drained.

Figure 18 - 2nd Stage Regulator Replacement

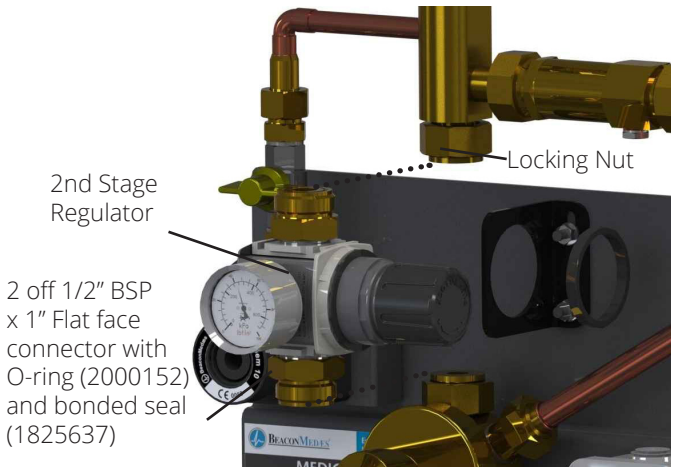

6.3.3 Fully disconnect the two 1" joints as shown in **figure 18** and gently remove the unit by sliding it towards you. Take care not to damage the seals.

6.3.4 Remove the two 1/2" BSP x 1" flat face connectors and fit to the new regulator

6.3.5 Inspect the existing seals and replace if required, see figure 18 for seal part numbers.

6.3.6 Taking care not to damage the O-ring seals replace the new regulator as shown in **figure 18**, and fasten the 2 flat face joints.

6.3.7 Follow steps in section 6.11 bring the ERM back online.

6.4 Replace 1st stage regulator

6.4.1 Complete steps in section 6.1 before carrying out any component replacement on the ERM.

6.4.2 Slowly turn the swivel nut of the top 1" connection. If the you hear gas escaping do not fully unscrew the joint until the system is fully drained.

6.4.3 Fully disconnect the 3 joints as shown in **figure 19** and gently remove the unit by sliding it towards you. Take care not to damage the seals.

Figure 19 - 1st Stage Regulator Replacement

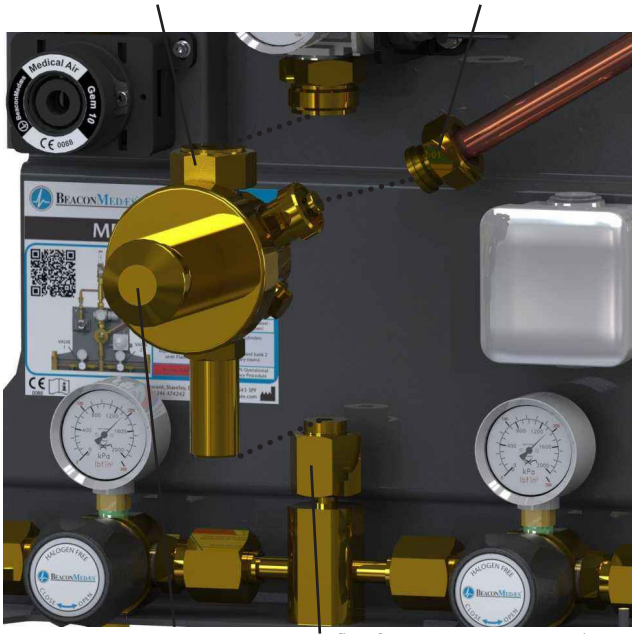

Bonded seal part numbers, 1/4" (2004808), 3/8" (1824977)

6.4.4 Remove the relief valve and blanking plugs form the old regulator and fit to the new unit.

6.4.5 Inspect the existing seals and replace if required, see **figure 19** for seal part numbers.

6.3.6 Taking care not to damage the O-ring seals replace the new regulator as shown in **figure 19**, and fasten the 2 flat face joints.

6.3.7 Follow steps in section 6.11 bring the ERM back online.

6.5 Replace 2nd stage relief valve (See table 8 for part numbers)

Table 7: 2nd Stage Relief Valve Part Numbers

Nominal Line Pressure	Relief Set Pressure	Part Number
4 Bar	5.3 bar	2000122
7 Bar	11 bar	2000123
11 Bar	13 bar	2000140

6.5.1 Complete steps in section 6.1 before carrying out any component replacement on the ERM.

6.5.2 Slowly turn the left hand 1" swivel nut connection. If the you hear gas escaping do not fully unscrew the joint until the system is fully drained.

6.4.3 Fully disconnect the two 1" joints as shown in figure 20 and gently remove the unit by sliding it towards you. Take care not to damage the seals.

6.4.4 Inspect the existing seals and replace if required, see figure 20 for seal part numbers. Remove the 1/8 blanking blug from the old relief valve and fit to the new unit.

Figure 20 - 2nd Stage Relief Valve Replacement

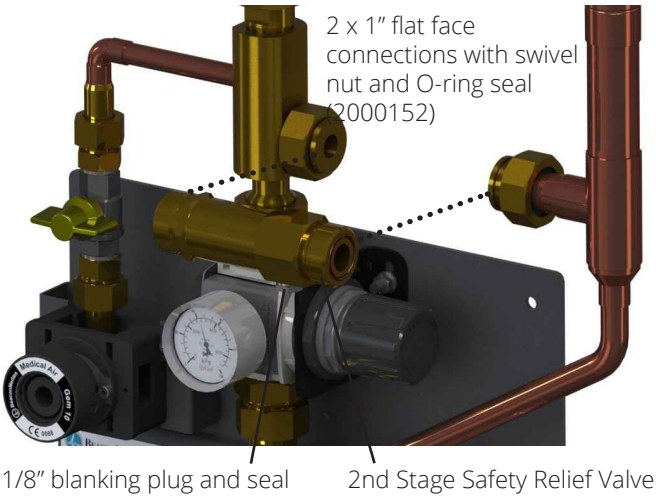

6.5.5 Taking care not to damage the O-ring seals replace the new relief valve as shown in figure 20, and fasten the 2 flat face joints.

6.5.7 Follow steps in section 6.11 bring the ERM back online.

6.6 Replace 1st stage relief valve (P/N: 2005384)

6.6.1 Complete steps in section 6.1 before carrying out any component replacement on the ERM.

6.6.2 Disconnect the 3/4" and 1" swivel nut connection on the exhaust line to ensure adequate space for removing the valve without spraining the pipe work (as shown in **figure 21**).

6.6.3 Start to unscrew the 1st stage relief valve, if you hear gas escaping do not fully remove until the system is fully drained.

6.6.4 Inspect the existing seals and replace if required, see figure 21 for seal part numbers.

6.6.5 Taking care not to damage the O-ring seals replace the new relief valve as shown in figure 21, and fasten the 2 exhaust pipe flat face joints.

6.6.6 Follow steps in section 6.11 bring the ERM back online.

Figure 21 - 1st Stage Relief Valve Replacement

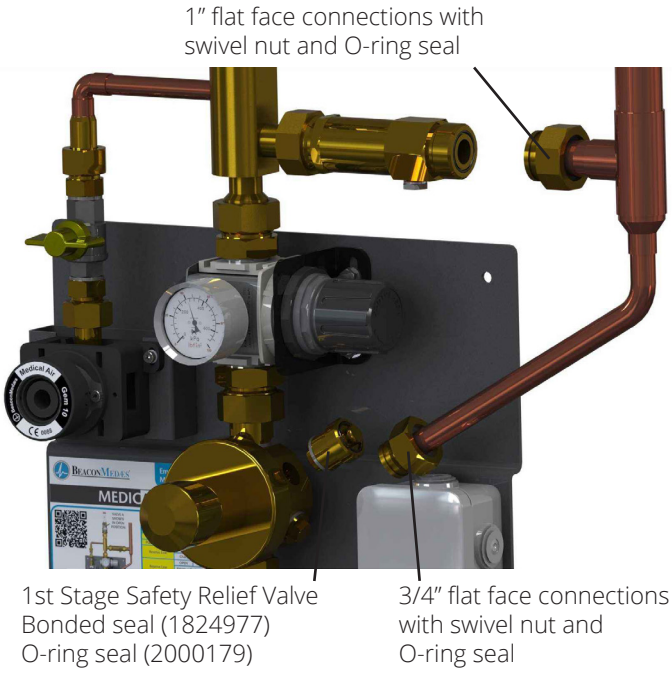

6.7 Replace High Pressure Bank Valve (P/N: 2005820)

6.7.1 Complete steps in section 6.1 before carrying out any component replacement on the ERM.

6.7.2 Slowly turn 1 of the 5/8" swivel nut connections. If the you hear gas escaping do not fully unscrew the joint until the system is fully drained.

6.7.3 Fully disconnect the two 2 joints as shown in figure 22 and gently remove the unit by sliding it towards you. Take care not to damage the seals.

Figure 22 - Cylinder Bank Valve Replacement

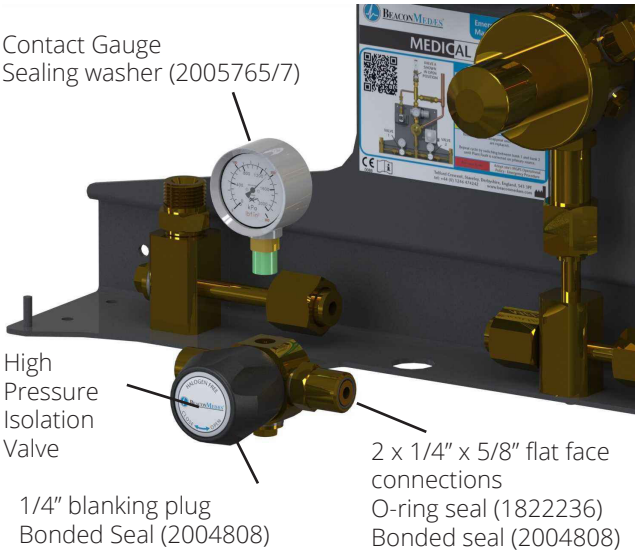

6.7.4 Remove the two 1/4" x 5/8" BSP fittings, blanking plug and contact gauge from the old valve. Take note of the direction label on the underside of the base of the valve, fit the connectors and gauge as per the old valve unit. Inspect the existing seals and replace if required, see **figure 22** for seal part numbers.

6.7.5 Taking care not to damage the O-ring seals replace the new valve as shown in **figure 22**, and fasten the 2 flat face joints.

6.7.6 Fully open the valve unit and stick the label onto the handle so the **"BeaconMedæs"** logo is horizontal

6.7.8 Follow steps in section 6.11 bring the ERM back online.

6.8 Replace Cylinder Header Non-return Valves (see table 9 for part numbers)

Table 8: Header Non-return Valve Part Numbers

GAS Type	Part Numbers
Oxygen (O2)	2000288
Nitrous Oxide (N2O)	2000289
Oxygen/Nitrous Oxide (O2/N2O)	2000290
Medical Air	2000291
Nitrogen (N2)	2000292
Carbon Dioxide (CO2)	2005850

6.8.1 Complete steps in section 6.1 before carrying out any component replacement on the ERM.

6.8.2 Slowly turn the swivel nut of the tailpipe connection. If the you hear gas escaping do not fully unscrew the joint until the system is fully drained.

6.8.3 Fully disconnect the tailpipe joints as shown in **figure 23**. Start to unscrew the non-return valve, if the you hear gas escaping do not fully unscrew the joint until the system is fully drained. Fully disconnect the non-return valve.

Figure 23 - Cylinder Header Non-return Valve Replacement

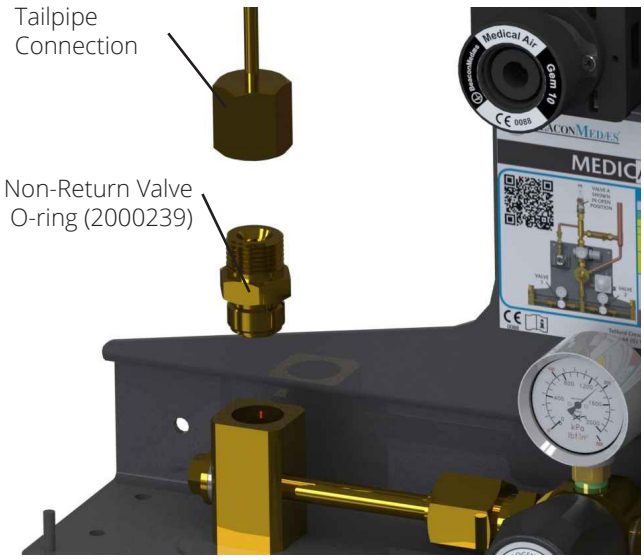

6.8.4 Inspect the existing seals and replace if required, see figure 23 for seal part numbers.

6.8.5 Reconnect the tailpipe to the non-return valve.

6.8.6 Follow steps in section 6.11 bring the ERM back online.

6.9 Replace Line Pressure Gauge (see table 10 for part numbers)

Table 9: Line Pressure Gauge Part Numbers

Nominal Line Pressure	Part Number
4 Bar	2005765
7 Bar	2005766
11 Bar	2005767

⚠ **CAUTION: Ensure the new gauge has the same scale as the one being replaced.**

6.9.1 Complete steps in section 6.1 before carrying out any component replacement on the ERM.

6.9.2 Start to unscrew the line pressure gauge, if you hear gas escaping do not fully remove until the system is fully drained.

6.9.3 Replace the old seals with those supplied with the new gauge.

6.9.4 Fit the new gauge as per the old unit.

6.9.5 Follow steps in section 6.11 bring the ERM back online.

Figure 24 - Line Pressure Gauge Replacement

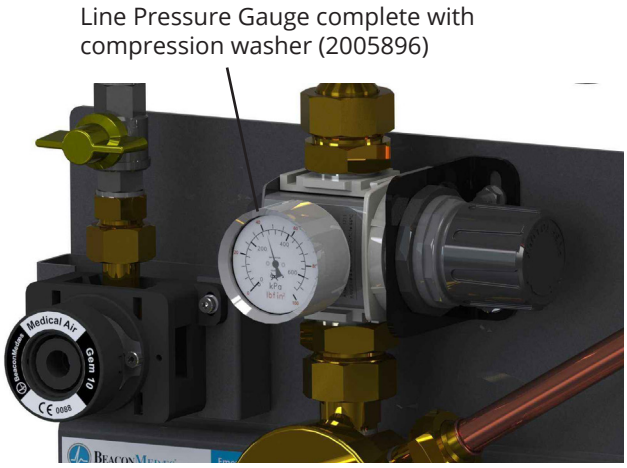

6.10 Replace Cylinder Contents contact Gauge (Se table 11 for part numbers.

Table 10: Content Pressure Gauge Part Numbers

Switch point	Part Number
14 Bar (100 Bar Scale)	2005772
68 Bar (315 Bar Scale)	2005773

Note - 14 bar switch point typically used on N2O and CO2. 68 bar switch point typically used for O2, O2/N2O, Medical Air, Surgical Air and N2O.

⚠ **CAUTION: Ensure the new gauge has the same scale and alarm contact as the one being replaced.**

6.10.1 Complete steps in section 6.1 before carrying out any component replacement on the ERM.

6.10.2 Disconnect the contact alarm wire, see **figure 25.**

6.10.3 Start to unscrew the line pressure gauge, if you hear gas escaping do not fully remove until the system is fully drained. If required disconnect the high pressure bank valve to gain access to the contact gauge (see section 6.7 - Replace High Pressure Bank Valve, for procedure).

6.10.4 Replace the old seals with those supplied with the new gauge.

6.10.5 Fit the new gauge as per the old unit including wiring as per **figure 25**.

6.10.6 Follow steps in section 6.11 bring the ERM back online.

6.11 Returning the ERM Back on-line

6.11.1 After completing any repair work on the ERM complete the step in section 3 - Commissioning, followed by section 4.2 - Procedure to prime ERM.

Note - The panel may need to be purged as per HTM 02-01 for UK installations, or as per relevant standards if installed outside the UK.

Figure 25 - Reserve Low Contact Gauge Alarm Wiring

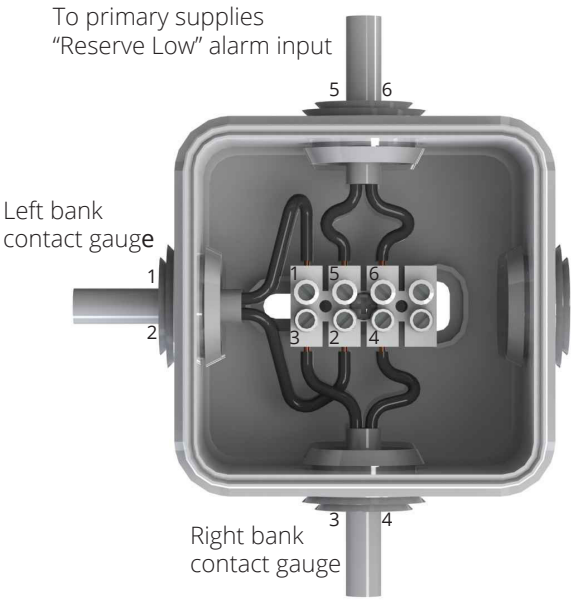

7. Recommended Spares and Accessories

7.1 Spares scheduling

The following table is the recommended spares holding, the number recommended spares for overseas customers are expressed in brackets and take into account expected transport delays (see table 11).

Table 11a: Accessories

Part Number	Description
8102370396	Modular Header Rack Assembly (x1)LH-RH - O2
8102370425	Modular Header Rack Assembly (x1)LH-RH - N2O
8102370437	Modular Header Rack Assembly (x1)LH-RH - O2/N2O
8102370449	Modular Header Rack Assembly (x1)LH-RH - MA
8102370461	Modular Header Rack Assembly (x1)LH-RH - N
8102370473	Modular Header Rack Assembly (x1)LH-RH - CO2
8102370398	Modular Header Rack Assembly (x2)LH-RH - O2
8102370427	Modular Header Rack Assembly (x2)LH-RH - N2O
8102370439	Modular Header Rack Assembly (x2)LH-RH - O2/N2O
8102370451	Modular Header Rack Assembly (x2)LH-RH - MA
8102370463	Modular Header Rack Assembly (x2)LH-RH - N
8102370475	Modular Header Rack Assembly (x2)LH-RH - CO2

Customised arrangements

For a custom arrangement where independent assemblies are required, accessories like the loop connection, corner connection and free standing configuration are available, more information could be found on the latest Manifold Header System installation manual.

Part Number	Description
2005887	5 Year Overhaul Kit Oxygen
2005888	5 Year Overhaul Kit Nitrous Oxide
2005889	5 Year Overhaul Kit Oxygen/Nitrous Oxide
2005890	5 Year Overhaul Kit Medical Air
2005891	5 Year Overhaul Kit Surgical Air 7 bar
2005892	5 Year Overhaul Kit Surgical Air 11 bar
2005893	5 Year Overhaul Kit Nitrogen 7 bar
2005894	5 Year Overhaul Kit Nitrogen 11 bar
2005895	5 Year Overhaul Kit Carbon Dioxide

Note - It is mandatory to replace 1st and 2nd stage relief valves every 5 years.

To accompany the replacement of relief valves an overhaul kit has been defined to include non return valves (header and main line), associated seals/washers and outlet capsule along with the 1st and 2nd stage relief valves.

BeaconMedæs advise to replace these additional components when the ERM is shut down for it's major relief valve service.

Note the kits are sized for the standard 2x1 ERM. For systems larger than this additional NRV capsules and tailpipe seals are required for each cylinder/tailpipe connection. See table 12 for details.

Note - industrial regulators are recommended to be replaced every 5 years. Whilst the medical standards do not specifically identify the need to replace the regulators within this time scale it should be considered good practice to do so. By replacing the regulators whilst the relief valves are being replaced interruption of supply is minimised.

BeaconMedæs therefore advise that regulators are also replaced during the 5 year overhaul of the ERM control panel.

Table 11b: Spares scheduling

Item ID	Part Number	ERM Description	Quantity req./ Number of Panels	
			<5	>5
1	2005773	Contact Gauge – 0-315 bar/68 bar Falling	1(2)	2(2)
	2005772	Contact Gauge – 0-100 bar/14 bar Falling	1(2)	2(2)
2	2005383	1st Stage Regulator	1(2)	2(2)
3	2005820	HP Valve Assembly	1(2)	2(2)
4	2005384	1st stage relief valve - 20 bar	1(2)	2(2)
5	2005689	Line Regulator – 4.6 bar Outlet	1(2)	2(2)
	2005690	Line Regulator – 8.6 bar Outlet	1(2)	2(2)
	2005691	Line Regulator – 11 bar Outlet	1(2)	2(2)
6	2005765	Line Gauge – 6 bar	1(1)	1(2)
	2005766	Line Gauge – 10 bar	1(1)	1(2)
	2005767	Line Gauge – 16 bar	1(1)	1(2)
7	2005778	Manifold block c/w Non-Return Valve	1(1)	1(2)
8	2000122	Relief Valve – 5.3 bar	2(2)	3(4)
	2000123	Relief Valve – 11 bar	2(2)	3(4)
	2000140	Relief Valve – 13 bar	2(2)	3(4)
9	1823637	'O' Ring – 12.1 I/D x 1.6 CSA	2(4)	2(4)
10	1822236	'O' Ring – 15.1 I/D x 1.6 CSA	2(4)	2(4)
11	2000179	'O' Ring – 17.1 I/D x 1.6 CSA	2(4)	2(4)
12	2000152	'O' Ring – 22.1 I/D x 1.6 CSA	2(4)	2(4)
13	2004808	1/4" Bonded Seal	2(4)	2(4)
14	1824977	3/8" Bonded Seal	2(4)	2(4)
15	1825637	1/2" Bonded Seal	2(4)	2(4)
16	2005820	Line Valve Assembly	1(2)	2(2)
17	2000288	Header Non-Return Valve Kit, O2	1(2) per Cylinder	
	2000289	Header Non-Return Valve Kit, N2O	1(2) per Cylinder	
	2000290	Header Non-Return Valve Kit, O2/N2O	1(2) per Cylinder	
	2000291	Header Non-Return Valve Kit, AIR	1(2) per Cylinder	
	2000292	Header Non-Return Valve Kit, N2	1(2) per Cylinder	
	2005625	Header Non-Return Valve Kit, CO2	1(2) per Cylinder	
18	2000172	Test Point Isolation Valve	1(2)	2(2)
19	2005775	Alarm Terminal Box	1(1)	1(1)

Item ID	Part Number	ERM Description	Quantity req./ Number of Panels	
			<5	>5
20	1826850	Gem 10 2nd fix - Oxygen (O2)	1(1)	1(2)
	1826851	Gem 10 2nd fix - Nitrous Oxide (N2O)	1(1)	1(2)
	1826852	Gem 10 2nd fix - Oxygen/ Nitrous Oxide (O2/N2O)	1(1)	1(2)
	1826853	Gem 10 2nd fix - Medical Air	1(1)	1(2)
	1826854	Gem 10 2nd fix - Surgical Air	1(1)	1(2)
	2004835	Gem 10 2nd fix - Nitrogen (N2)	1(1)	1(2)
	2004836	Gem 10 2nd fix - Carbon Dioxide (CO2)	1(1)	1(2)
21	2005692	Copper Sealing Washer - Gauge	2(4)	4(6)
22	2000239	'O' Ring - NRV capsule	2(4)	4(6)

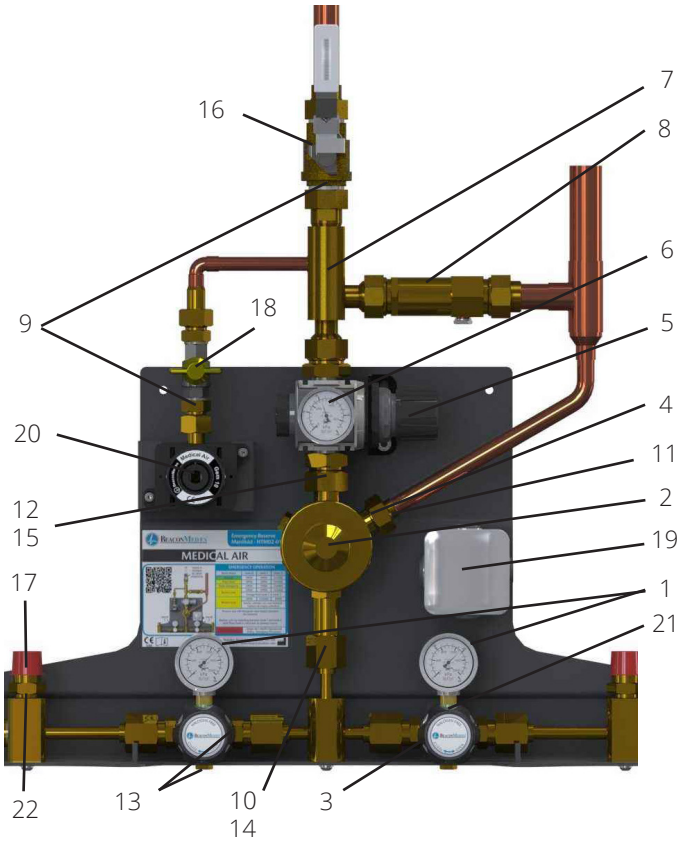

BeaconMedæs®

Tel: +44 (0) 1246 474242
www.beaconmedaes.com

EC REP

Atlas Copco Airpower n.v.
Boomsesteenweg 957
2610 Wilrijk - Belgium

Atlas Copco Ltd. trading as Atlas Copco Medical
Unit 18 Nuffield Way, Abingdon, Oxfordshire, UK OX14 1RL

CE
0088