Operation and Maintenance Instructions

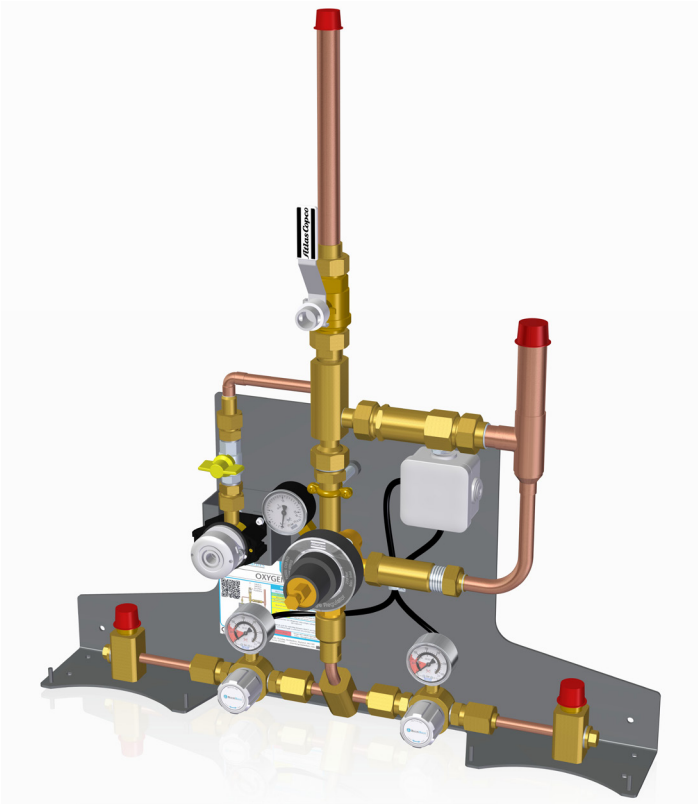

Manifold Control Systems

ECO Emergency Reserve Manifold (ERM)

Part number 2212020098

Revision 03

Mar 11, 2019

BeaconMedæs®

Operation and Maintenance Manual

Manifold Control Systems - ECO Emergency Reserve Manifold

This unit is purchased from:

Date purchased:

Model number:

Serial number:

Option(s) included:

Any information, service or spare parts requests should include the serial number and be directed to:

BeaconMedæs
Telford Crescent, Staveley
Derbyshire S43 3PF

Telephone: +44 (0) 1246 474242
Email: gbn.info@beaconmedaes.com
Website Contacts: www.beaconmedaes.com

BeaconMedæs reserves the right to make changes and improvements to update products sold previously without notice or obligation.

Atlas Copco Ltd. trading as Atlas Copco Medical
Unit 18 Nuffield Way, Abingdon, Oxfordshire, UK OX14 1RL

Personnel must make themselves familiar with the contents of this manual and the function of the unit before installing, operating or maintaining.

Abbreviations			
Abbreviation	Full Description	Abbreviation	Full Description
BS	British Standard	kPa	Kilo pascals
BSP	British Standard Pipe	Max	Maximum
CO2	Carbon dioxide	Med	Medical
°C	Degree Celsius	m	Meter
ø	Diameter	mm	Millimetres
ERM	Emergency reserve manifold	Min	Minimum
EN	European Standards	N2	Nitrogen
1st	First	N2O	Nitrous oxide
HTM	Health Technical Memorandum	NRV	Non-return valve
ID	Identification	OD	Outside Diameter
“	Inch	O2	Oxygen
ISO	International Standard Organisation	%	Percentage
Kg	Kilograms	2nd	Second

Table of Contents

Safety Precautions

⚠ **DO NOT USE OIL OR GREASE** on any Lifeline ECO Emergency Reserve Manifold (ERM) unit for any reason. This could lead to a FIRE or an EXPLOSION. Only use approved OXYGEN COMPATIBLE lubricants, which can be purchased from BeaconMedæs if necessary.

Pressurised gas from the system may cause personnel injury or property damage if the unit is improperly operated or maintained.

This section gives safety, storage and handling information for the BeaconMedæs Emergency Reserve Manifold (ERM) ECO only. Component parts lists and descriptions are available on request.

Operators should have carefully read and become familiar with the contents of this manual before maintaining the ERM ECO.

Operator is expected to use common sense safety precautions, good workmanship practices and follow any related local safety precautions.

Component descriptions and parts lists are available on request.

Identification of symbols

The following symbols apply to this product and are used in these instructions and on the product in question. The meanings of these symbols are as specified below: -

	Read instructions
	Ambient temperature range
	Ambient humidity range
	Ambient pressure range
	Date of manufacture
	Do not dispose of in general waste

Environmental Transport and Storage Conditions

All products are separately packaged and stored in controlled conditions.

Environmental Operating Conditions

Adverse environmental conditions and harsh abrasives or chemicals may cause damage to the unit.

⚠ WARNING! Only use approved leak detection fluids with this product. Other leak detection fluids may contain surfactants that can impair the structural integrity of the terminal unit.

Environmental Protection

Discard the unit and/or components in any standard refuse facility. The unit does not contain and hazardous substances.

Cleaning

The manifold should be wiped over with a damp cloth frequently to remove any dust or foreign substances

Safety Notice

Persons undertaking any installation and/or maintenance must be fully trained in specialist work of this nature.

The “PERMIT TO WORK” procedure must be adhered to for all installations once commissioned.

The manifold is designed and built in accordance with HTM 02-01 regulations and therefore should be installed as such.

Oil, grease and jointing compounds must not be used.

Do not attempt to prove the pressure relief valve, under any circumstances, by altering the regulator. Pressure relief valves must be removed and tested off site by a registered test centre and a certificate of conformity issued.

1. General Information

1.1 Introduction

The BeaconMedæs ERM ECO is principally designed for use as a secondary source of supply, for emergency use or to permit servicing or repair.

The ERM ECO supplies one of the following Medical gases to a piped distribution system, Oxygen, Nitrous Oxide, O2/N2O 50%: 50%, Medical Air, Surgical Air, Nitrogen & Carbon Dioxide.

See **figure 1** for general arrangement and **figure 2** for the schematic diagram.

The ERM ECO consists of: -

1. 2 x High Pressure Isolation Valves (1 per cylinder bank.
2. 2 x Cylinder Pressure Gauges with Contact Alarms (for signalling reserve low alarm fault).
3. Multi-stage Pressure Regulator (c/w inlet filter).
4. Gauge for Distribution System Pressure.
5. Integral Non-return Valve Assembly.
6. 1st Stage Pressure Relief Valve.
7. Line Pressure Relief Valve.
8. Lockable Isolation Valve.
9. Medical Gas Sampling Test point (GEM 10).
10. Test point Isolation Valve.
11. Pipeline connection point (22mm OD Copper Tube)
12. Pressure Relief Exhaust Connection point (28mm OD Copper Tube).
13. Termination Box For Remote Alarm.
14. 2 x Cylinder Manifold Header Block.
15. 2 x Gas Specific Non-return Valve.
16. Product Label C/W Instructions for Use.
17. 4 x Chain Hooks for Cylinder Restraint.

Note: Cylinder Tailpipes are also required but should be ordered separately. Header extensions are available but are also ordered separately.

Figure 1 - ERM ECO General Arrangement (2 x 1 Manifold as standard). Additional Cylinder Header Extension kits available.

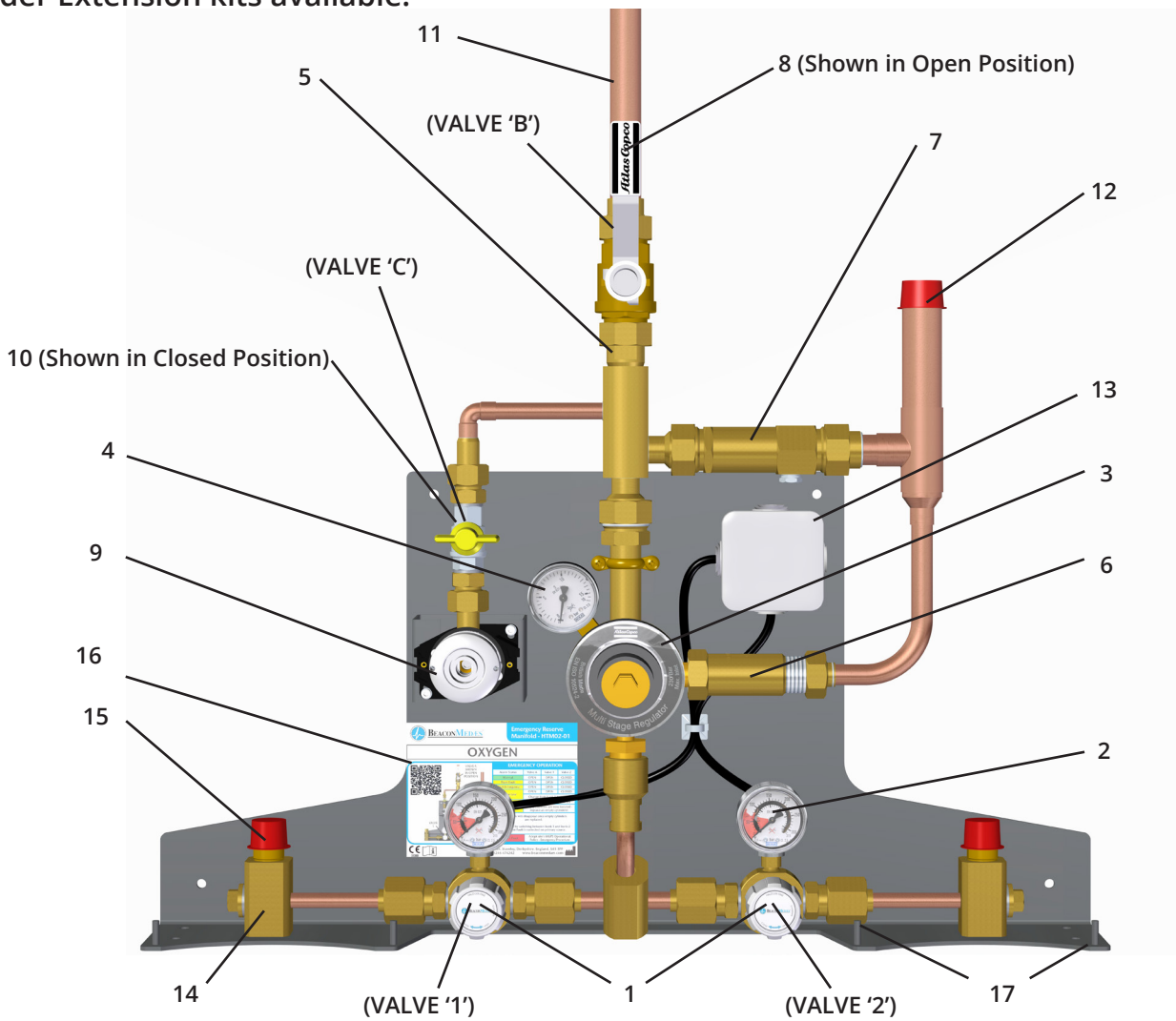

Figure 2 - Schematic Diagram

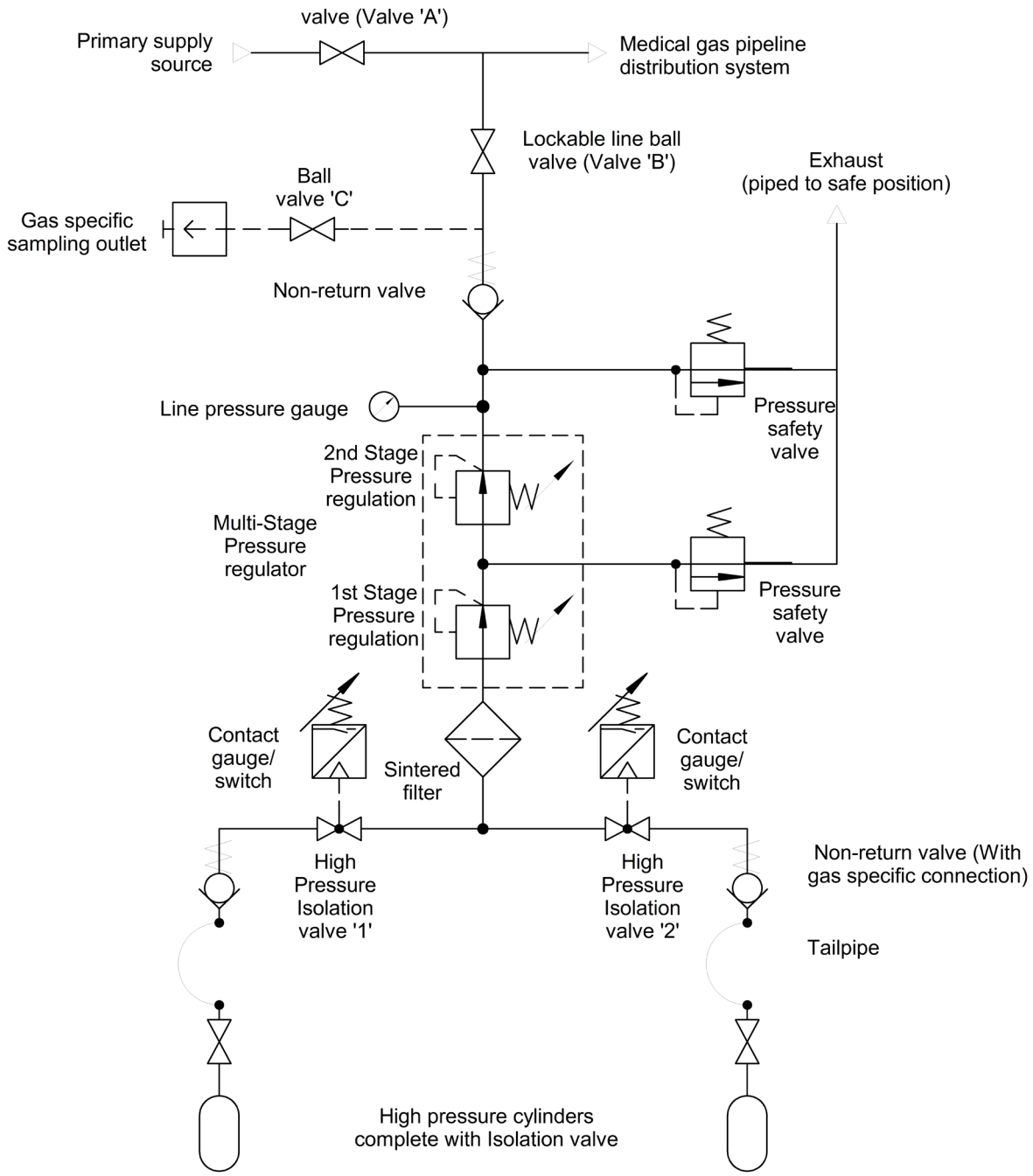

Additional manifold headers can be connected to the ERM ECO to increase its gas supply capacity.

The manifold is connected to the distribution system downstream of the primary medical gas supply system. The ERM ECO can be isolated from the distribution system by the lockable isolation valve supplied. This valve should be left open during normal operation, so the ERM ECO will automatically supply the pipeline with medical gas in the event of the primary system failing to supply.

The line pressure regulator should be set slightly lower than the primary supply pressure to prevent the ERM ECO from feeding the pipeline during normal operation of the primary system.

1.2 Multi-stage Pressure Regulator (1st Stage)

For safe operation with regard to performance, mechanical strength, resistance to ignition in pure high pressure oxygen supply and cleanliness, the unit conforms to BS EN ISO 10524-2. A pressure relief valve connected to the regulator protects the downstream pressure and is set at 2000 kPa (20 bar).

1.3 Multi-stage Pressure Regulator (2nd Stage)

For safe operation with regard to performance, mechanical strength and contamination the unit conforms to BS EN ISO 10524-2, the second stage pressure regulator is a manually set piston type and is used to set the system pressure to suit typical nominal values for 4 and 7 bar pipeline systems.

1.4 Line Pressure Relief Valve

The line pressure relief valves are preset to the values shown in table 1 for the different distribution pressures.

Table 1: Relief Valve Set Points

Relief Valve Set Point	Nominal Distribution Pressure
530 kPa (5.3 bar)	400 kPa (4 bar)
1100 kPa (11 bar)	700 kPa (7 bar)

The line pressure relief valve is fitted between the pressure regulator and the isolation valve (just before the integrated non-return valve), thus protecting the delivery system from over pressurisation by discharging to atmosphere in the event of regulator failure.

1.5 Header Extension For Additional Cylinders

The ERM ECO is suppled as standard with cylinder connections for a 2x1 manifold (1 cylinder per bank).

The ERM ECO can be upgraded to a 2x2 manifold using the extension kits referenced in table 2. The manifold can be extended further by using the standard BeaconMedæs secondary header extensions referenced in table 3.

Table 2: Cylinder Header Extension Kits (upgrade to 2x2 manifold).

GAS TYPE	PART Ref.
Oxygen (O2)	8102370396
Nitrous Oxide (N2O)	8102370425
Oxygen/Nitrous Oxide (O2/N2O)	8102370437
Medical Air	8102370449
Nitrogen (N2)	8102370461
Carbon Dioxide (CO2)	8102370473

Note - Kits contain extension headers for both sides.

Cylinder Header Extension Kits (upgrade to beyond 2x1 manifold see table 10 page 23).

1.6 Halogen Free Components

The ERM ECO contains NO HALOGENATED polymers located in the gas stream that may experience pressurised oxygen in excess of 3000 kPa (30 Bar) in normal operation or single fault condition, as recommended for safe practise of the medical gas pipeline system.

2. Installation

2.1 Installation procedure for Panel.

⚠ **CAUTION: Ensure no contaminates, oil or grease come into contact with any of the gas connection/ internals.**

2.1.1 Unpack and inspect all items for damage.

2.1.2 Check wall for suitability.

⚠ **CAUTION: Supplied fixings are for use with solid masonry walls only. Alternative fixing types are not suppled with the unit. For securing to alternative wall types, ensure that wall structure and selected fasteners are suitable for supporting the 16 kg weight of the ERM ECO.**

2.1.3 Identify the centre position of the ERM ECO on the wall and mark.

2.1.4 Drill wall and fit wall plugs. Screw the ERM ECO to the wall, checking that it is firmly attached. See **figure 3 & 4** for typical mounting heights.

2.1.5 Loosely connect the supplied ø22mm OD stub pipe (Item 11, **figure 1**) to the main pipeline isolation valve (Item 8, **figure 1**). Do not fit the O'ring seal untill after brazing.

2.1.6 Braze the pipework using the fluxless brazing technique with nitrogen purge.

⚠ CAUTION: Ensure the brazed connection point is isolated from any other pipeline source of supply.

Figure 3 - Typical Installation For Use With 'J' & 'G' Type Cylinder

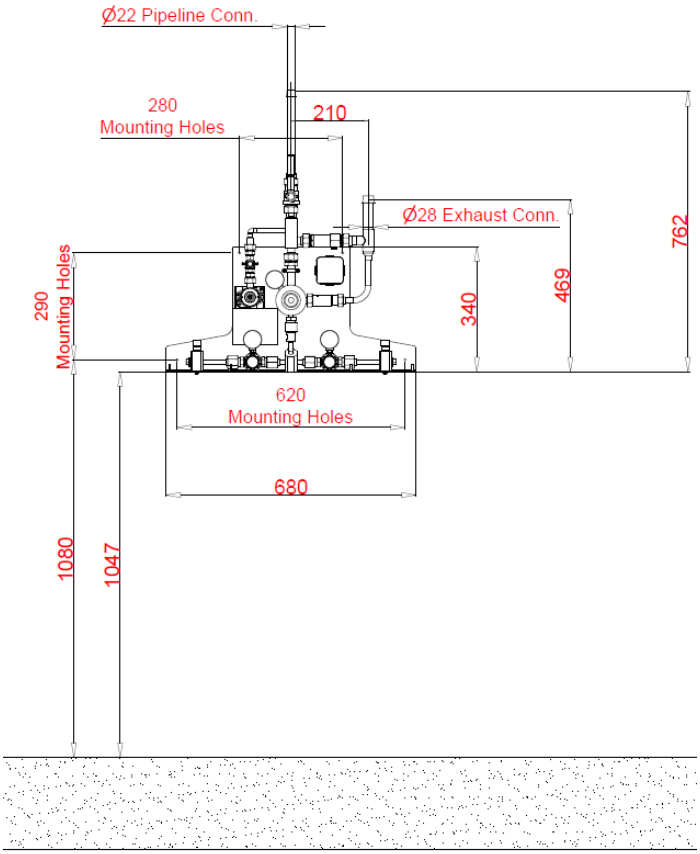

⚠ CAUTION: Supplied fixings are for use with solid masonry type walls only. Typical ERM ECO weight is 16kg.

Note - 'J' type cylinders typically for Oxygen and Medical Air.

'G' type cylinders typically for Nitrous Oxide and N2O/O2 mix (Entonox).

2.1.7 Undo the securing nuts on the stub pipes and insert the 'O' ring supplied into the connection grooves and tighten.

2.1.8 The pipework should be secured to the wall using munsen rings (not supplied). It would be recommended to fit the first pipe support to the supplied ø22mm OD stub pipe (Item 11, **figure 1**). The next support should typically be fitted within 2m of the first.

2.1.9 The ø28mm exhaust line (Item 12, **figure 1**) shall be brazed using fluxless brazing technique with nitrogen purge.

⚠ CAUTION: The ø28mm exhaust line (Item 12, figure 1) needs to be piped away from the manifold room to a safe location to prevent buildup of waste gas in an enclosed space in the event of a regulator failure.

⚠ CAUTION: Do not reduce the diameter of the pipe used for the exhaust line.

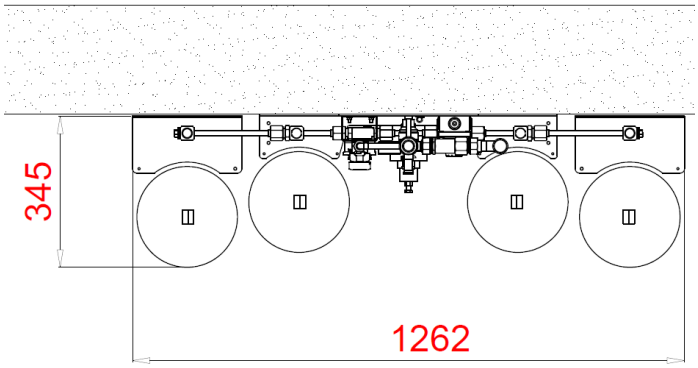

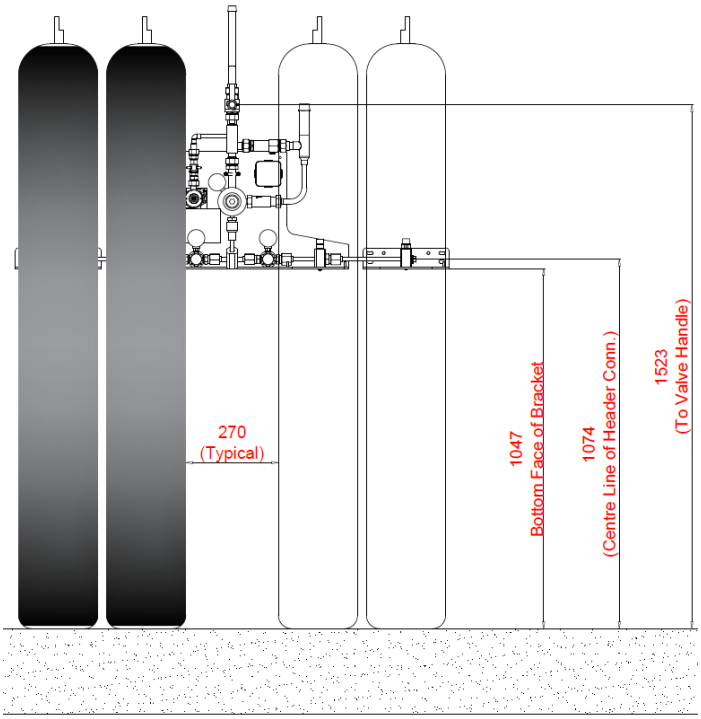

Figure 4 - Typical Installation For use with 'VF' Type Cylinders

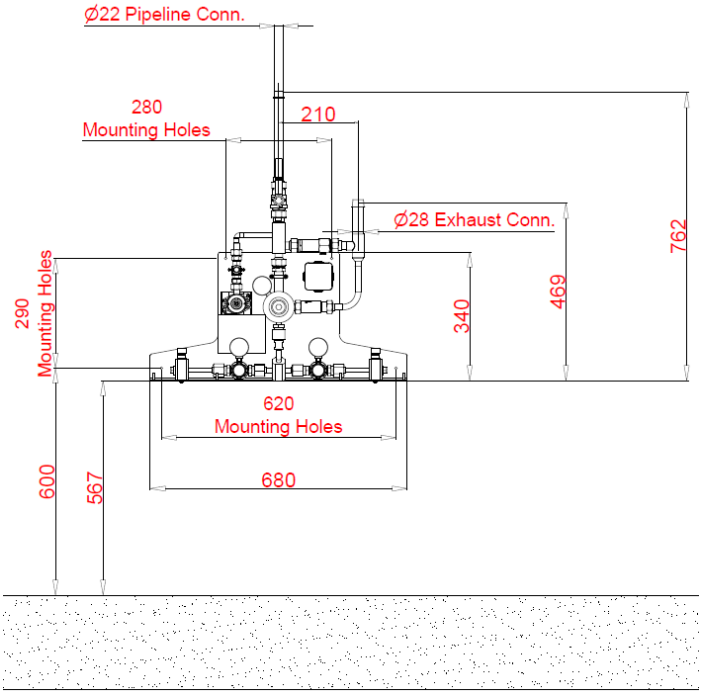

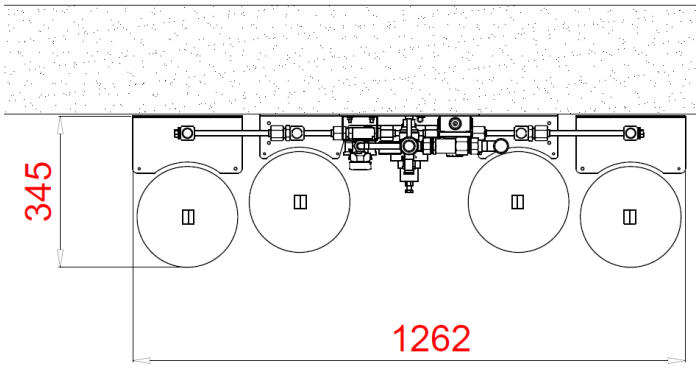

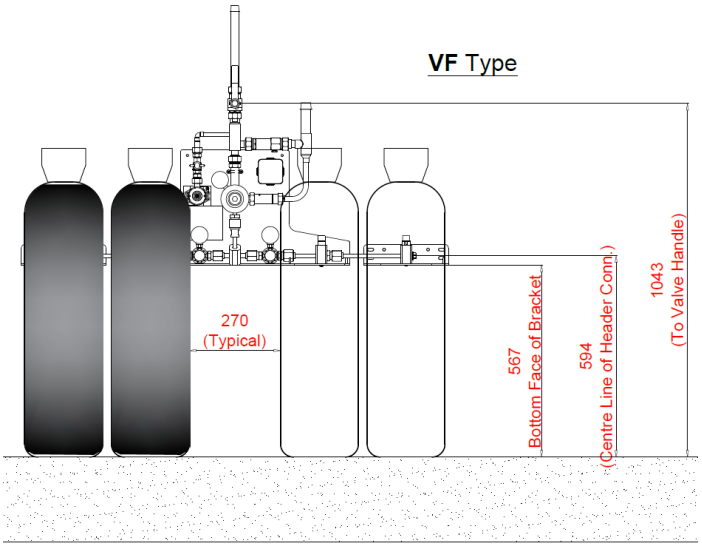

⚠ CAUTION: Supplied fixings are for use with solid masonry type walls only. Typical ERM ECO weight is 16kg.

Note - 'VF' size cylinders typically used for CO2

Figure 5 - Reserve Low Alarm Wiring

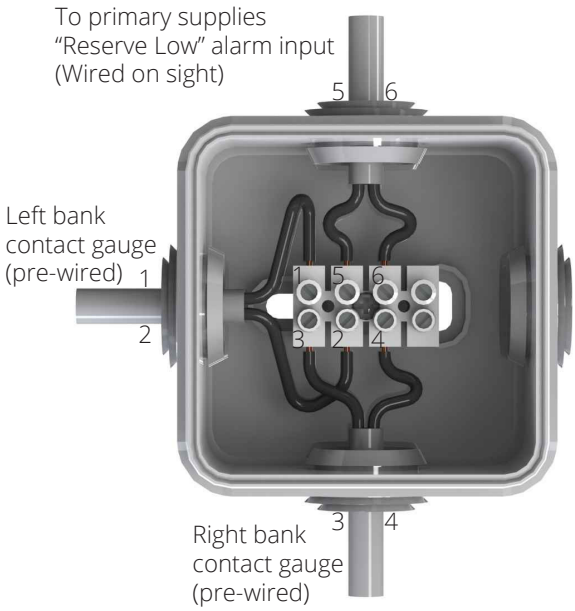

2.2 "Reserve Low" alarm wiring.

2.2.1 Use a flat bladed screw driver to pop the terminal cover at the corners.

2.2.2 Wire the reserve low alarm as shown in **figure 5**. (Left and right bank contact gauges are pre-wired).

2.3 Installation procedure for Modular Manifold Header.

⚠ CAUTION: Ensure that all the header rails supplied are the correct gas type. The gas ID is stamped onto the flat section of the NRV caps.

2.3.1 Cylinder Header Extension Kits (upgrade to 2x2 manifold). See figure 6 and 7.

2.3.1.1 Remove the 3/8" BSP blanking plug and bonded seal from the end of the header block and fit 3/8" x 5/8" BSP fitting (supplied with kit) complete with O-ring seals for connection of the extension header.

2.3.1.2 Offer cylinder support rack up to the header rail and secure using the M6 x 16 hex head set screws and flange nut supplied with the extension kit.

2.3.1.3 Secure the previously fitted 5/8" connector to the extension header.

2.3.1.4 If no more header extensions are to be fitted, blank off the end of the header with the 3/8" BSP plug and bonded seal that was removed in step 2.3.1.1.

2.3.1.5 Mark and drill the optional extension bracket wall mount if required. Fit the wall plug and secure with the No. 10 pan head supplied with the kit.

⚠ CAUTION: Supplied fixings are for use with solid masonry type walls only. Typical extension bracket is 1.5kg per side.

Figure 6 - Cylinder header extension fitting details (upgrade to 2 x 2)

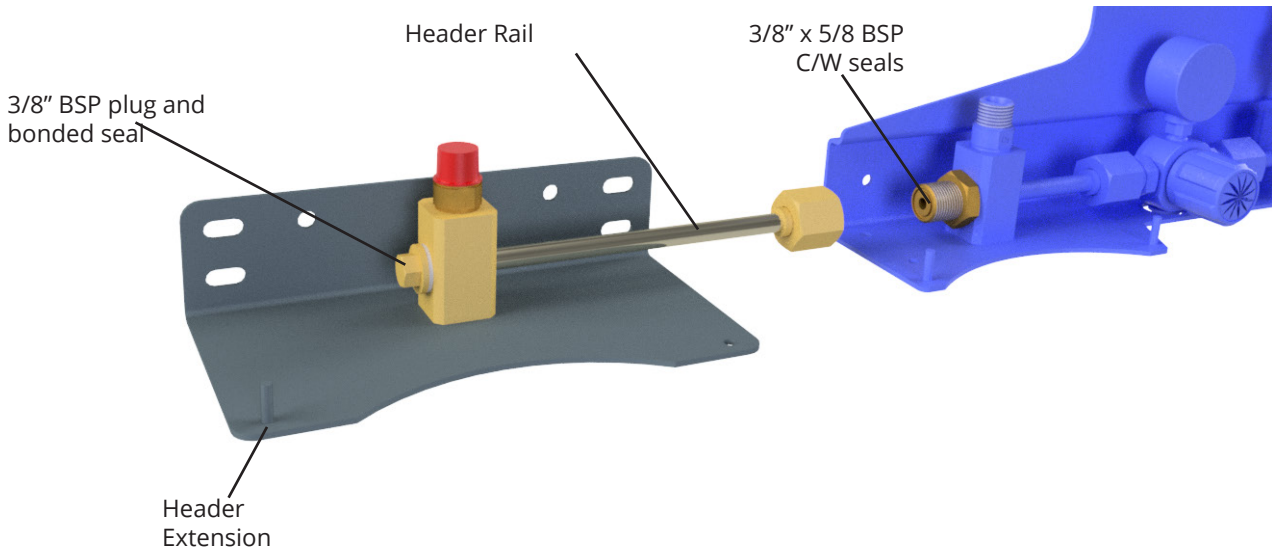

Figure 7 - Typical cylinder header extension layout details (upgrade to 2 x 2), extension kits from table 2.

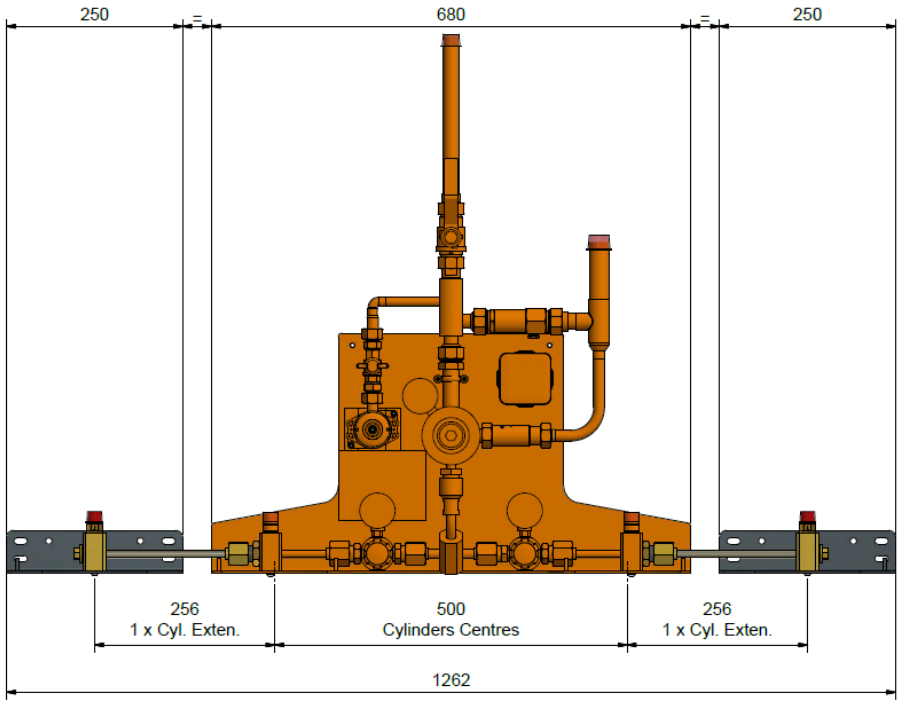

2.3.2 Additional Cylinder Header Extensions (upgrade to 2 x 3 plus manifold). See figure 8 to 12.

⚠ CAUTION: Ensure that all the header rails supplied are the correct gas type. The gas ID is stamped onto the flat section of the NRV caps.

2.3.2.1 Remove the 3/8" BSP blanking plug and bonded seal from the end of the header block and fit 3/8" x 5/8" BSP fitting (supplied with kit) complete with O-ring seals for connection of the extension header.

2.3.2.2 Line up the header connection, mark mounting hole positions and drill. Fit the wall plug and secure with the No. 10 pan head supplied with the kit.

2.3.2.3 Secure the previously fitted 5/8" connector to the extension header.

2.3.2.4 Repeat 2.3.2.1 & 2.3.2.3 for any additional header extensions.

2.3.2.5 If no more header extensions are to be fitted, blank of the end of the header with the 3/8" BSP plug and bonded seal that was removed in step 2.3.2.1.

⚠ CAUTION: Supplied fixings are for use with solid masonry type walls only. Typical extension bracket is 2.5kg per side.

Figure 8 - Cylinder header extension fitting details (upgrade to 2 x 3 plus)

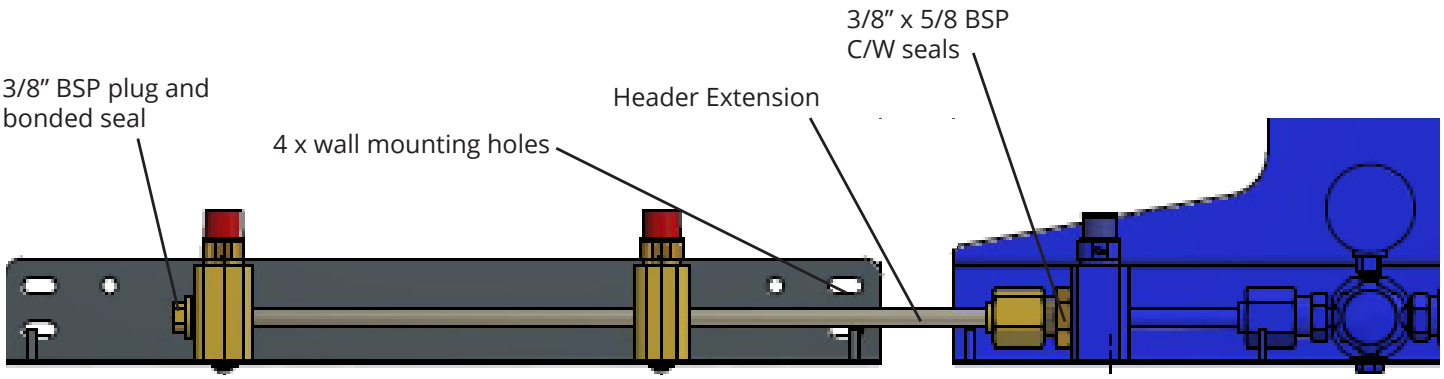

Figure 9 - Typical cylinder header extension layout details (upgrade to 2 x 3), extension kits from table 3.

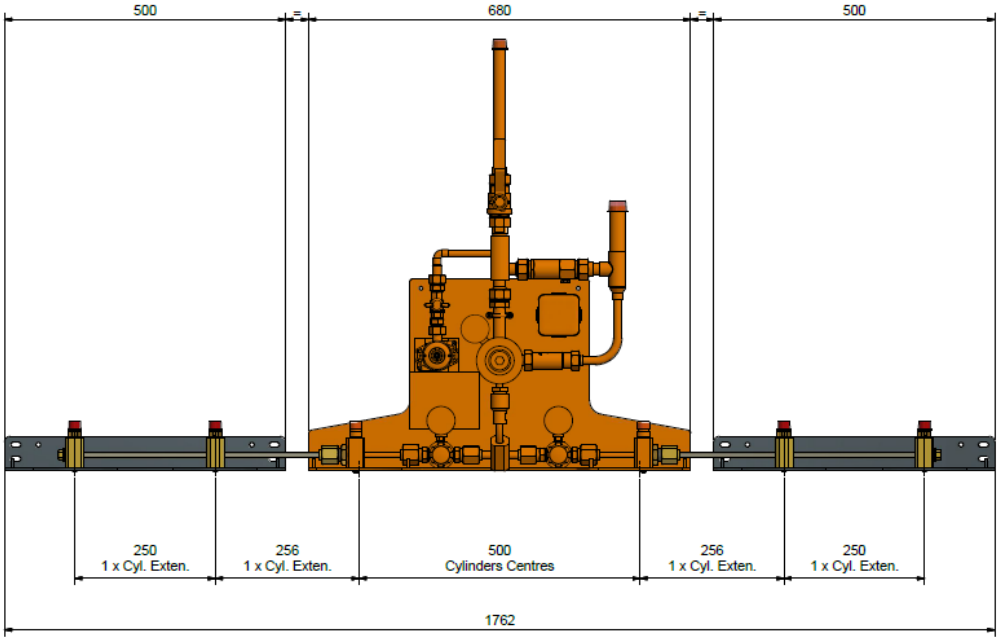

Figure 10 - Typical cylinder header extension layout details (upgrade to 2 x 4), extension kits from table 3.

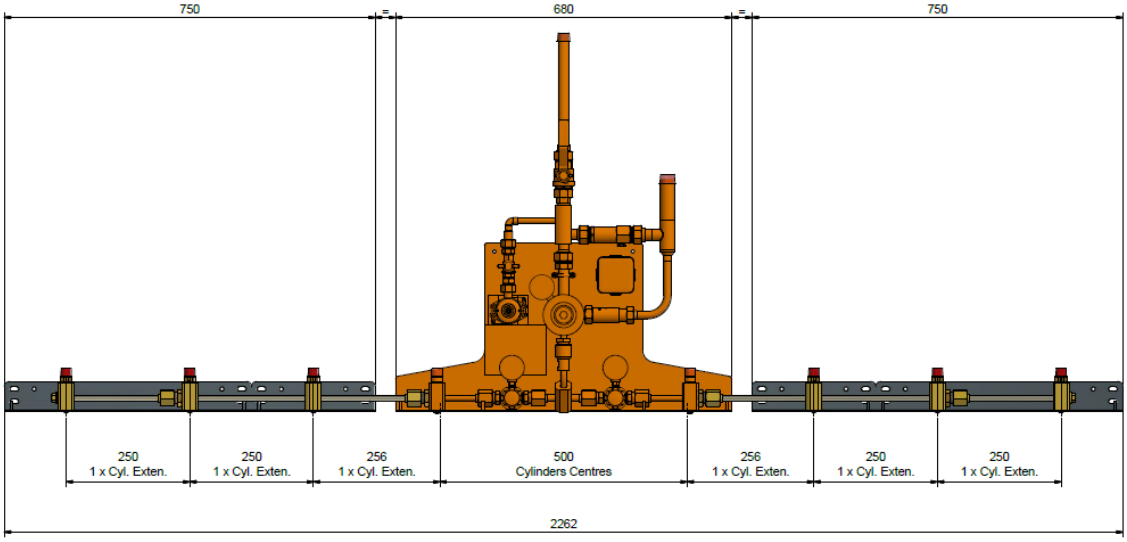

Figure 11 - Typical cylinder header extension layout details (upgrade to 2 x 5), extension kits from table 3.

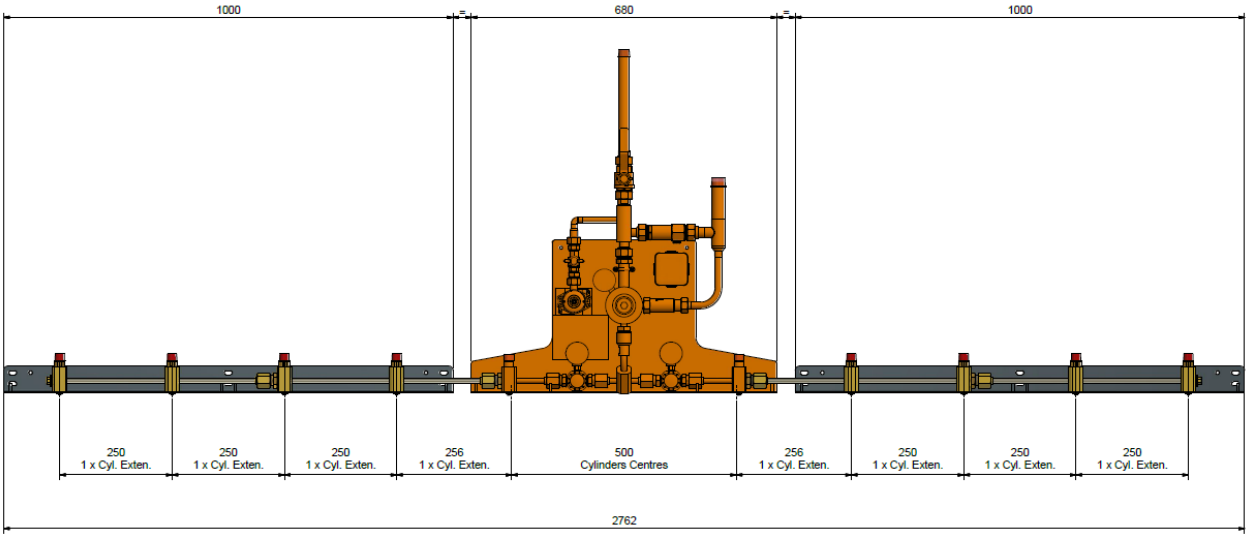

Figure 12 - Typical cylinder header extension layout details (upgrade to 2 x 6), extension kits from table 3.

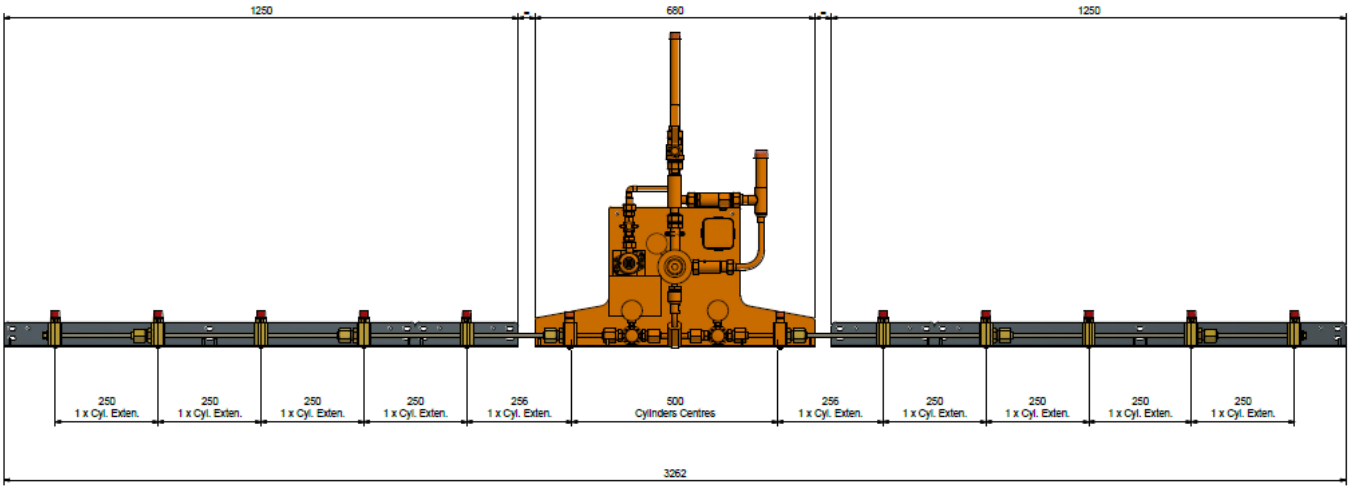

NOTE - For additional cylinders continue to add the dimensions of the last header kit from either figure 9 or 10 for either single or double racks.

2.4 Cylinder Connection

⚠ CAUTION: Ensure that all the tailpipes supplied are the correct gas type. The gas ID is stamped onto the nut that connects to the header non-return valve.

2.4.1 Connect the tailpipes to the non-return valves on the header racks as shown in **figure 13**.

2.4.2 Refer to hospitals/site policy for safe cylinder handling (See section 4.6 for typical cylinder handling safety check list), move the cylinders into place (see **figures 3, 7, 9-12**) ready for connection to the tailpipes.

⚠ CAUTION: Only persons who have had specific training in the safety of medical gases, manual handling techniques and cylinder changing procedures should be allowed to change cylinders on medical gas manifolds or medical equipment.

2.4.3 Connect the cylinders to the pin indexed clamp on the tail pipe, as shown in figure 13. Ensure the bodok seal is in place at the opposite side to the thumb screw on the pin index clamp before connection.

NOTE - Pin-index tailpipes to BE EN ISO 21969 are supplied as standard. Alternative connection types are available on request.

2.4.4 See section 4.7 for cylinder operation procedure

2.5 Installation check

2.5.1 Ensure that all tailpipes are connected to the cylinders and manifolds on both sides and that the restraint chains are secure around the cylinders.

2.5.2 Isolate the panel from the pipeline using isolation valve 'B' (shown in **figure 1**).

2.5.3 Ensure that the left-hand bank high-pressure isolation Valve '1' (**Figure 1**) is fully open by turning anti-clockwise, and the right-hand high-pressure isolation valve '2' (**Figure 1**) is fully closed by turning clockwise.

2.5.4 Using 1 cylinder, slowly pressurise the left-hand bank (see section 4.7 - Cylinder operation). The left-hand contents gauge should indicate full cylinder pressure. The distribution system pressure gauge on the regulator (adjust as necessary) should read typically as per table 4 (Section 4 - Principle of Operating).

⚠ CAUTION: It would be recommended to set the ERM line pressure at least 0.2 bar below the main supply source pressure at full design flow to ensure the emergency manifold does not supply the pipeline during normal primary source operation.

2.5.5 Check for leaks. Now ensure all left-hand bank cylinders are closed.

2.5.6 Open valve 'C' and relieve the pressure from within the ERM from the sampling outlet then close valve 'C' (Item 9 & 10, **Figure 1**).

2.5.7 Repeat the 2.6.3 to 2.6.6 for the right-hand cylinder bank.

2.5.8 Check the reserve low alarm is connected as shown in figure 5.

2.5.9 The installation must now be purged as per HTM 02-01 for UK installations, or as per relevant standards if installed outside the UK.

Figure 13 - Typical tailpipe and cylinder connection

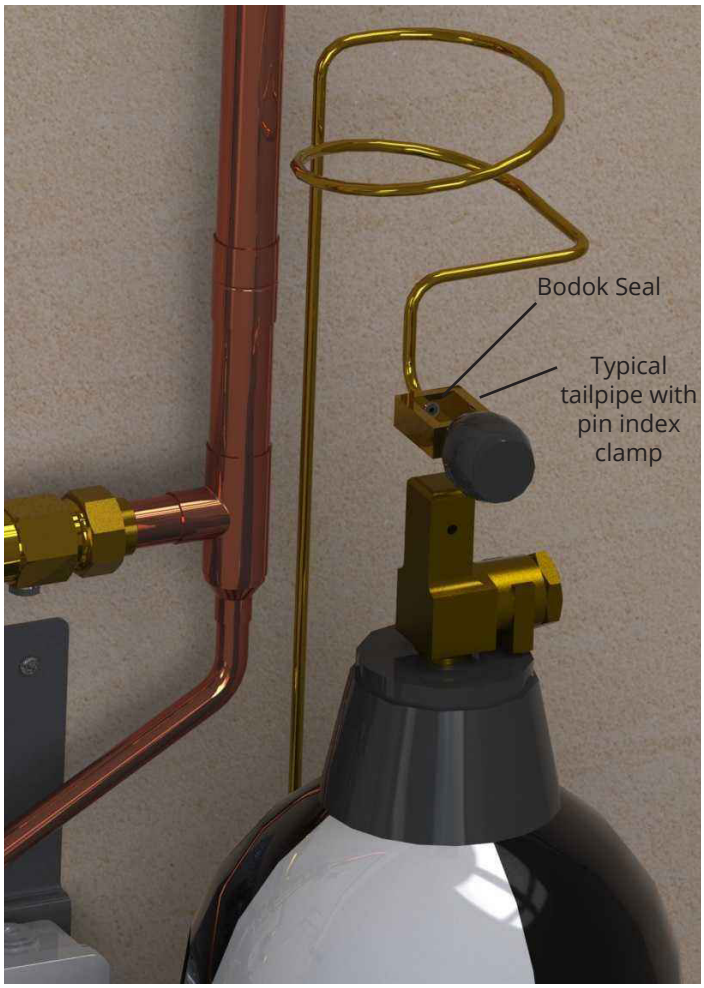

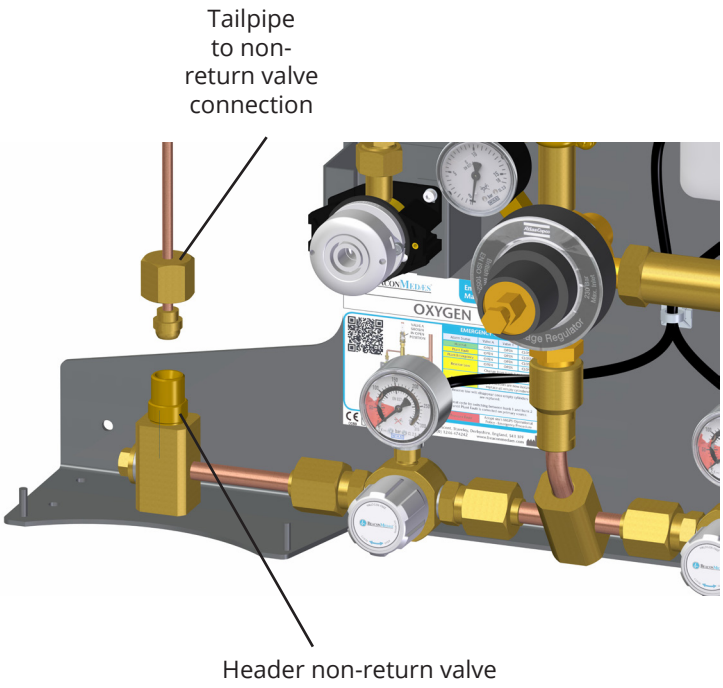

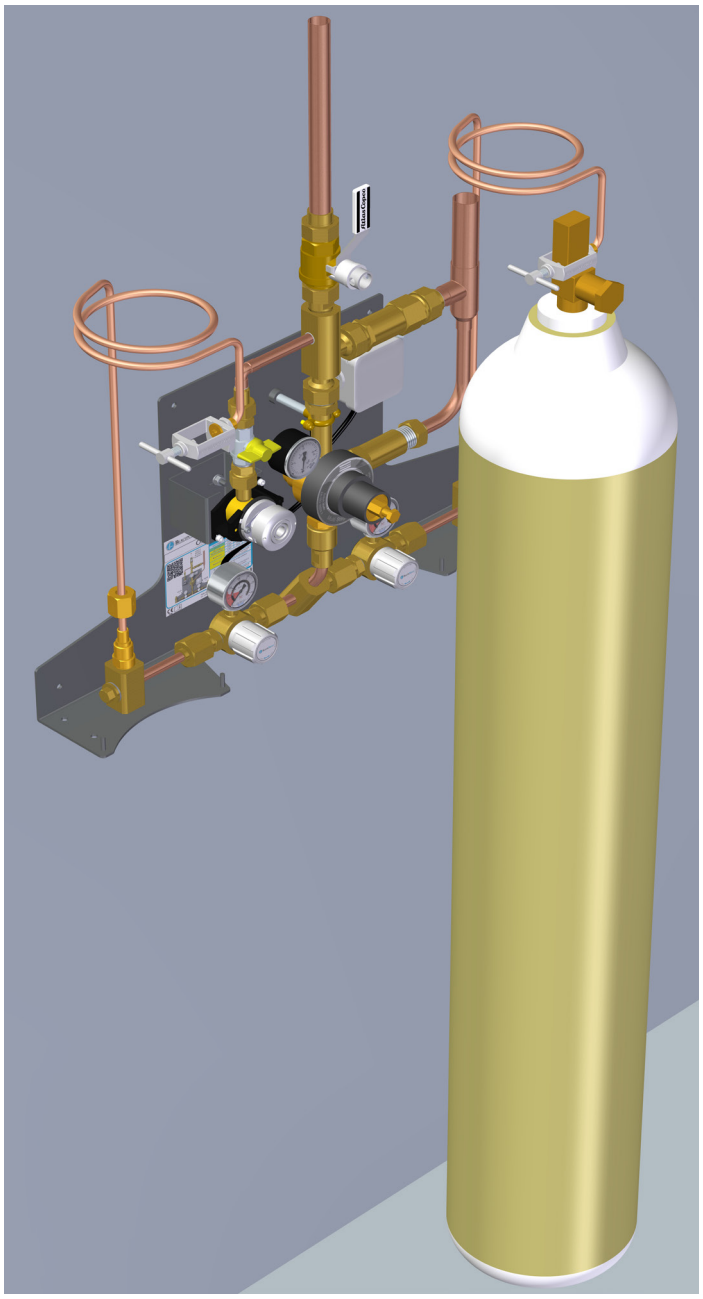

3. Commissioning

3.1 General

Commissioning of the ERM ECO must be carried out in full after initial installation. The object of the commissioning procedure is to ensure that all components are serviceable and that the overall system is operable and set to the correct distribution pipeline pressure. Suitably qualified competent personnel who are familiar with this manual must only undertake commissioning of the ERM ECO.

3.2 Preparation

3.2.1 Ensure that all tailpipes are connected to the cylinders and manifolds on both sides and that the restraint chains are secure around the cylinders.

3.2.2 Ensure that the outlet pipe from the ERM ECO is connected to the distribution system of the same gas service, downstream of the main supply unit and isolation valve 'A' (shown in **figure 2**).

3.2.3 Ensure that the ERM ECO isolation valve 'B' (shown in **figure 1**) is fitted and in the closed position.

3.2.4 Open all cylinder valves on the ERM ECO.

3.2.5 Fully open the high-pressure isolation valves 1 and 2 (shown in **figure 1**).

3.2.6 Check connections on the headers, tailpipes, regulator and associated pipework for leaks.

3.2.7 Fully close the right-hand high-pressure isolation valve 2 (**figure 1 & 2**).

3.3 Pressure Checks

3.3.1 Ensure that full gas cylinder pressure is shown on the cylinder contents gauges (Fitted to valve 1 & 2, see figure 1).

3.3.2 With Valve 'B' closed and valve 'C' open, exhaust a quick blast of gas from the sampling outlet, close valve 'C'. Check that the pressure on the pipeline distribution pressure gauge is typically as per table 4. Adjust as necessary.

Note...For reducing the pressure set point, ensure valve 'B' is closed and sampling outlet isolation valve 'C' is open. Gently bleed the gas from the sampling outlet while making adjustments, as the regulator is a none relieving type. Always leave valve 'C' closed when finished.

3.3.3 Check that the line pressure does not vary outside of the requirements of the installation (see table 4, Section 4 - Principle of Operating, for typical values).

3.3.4 Complete the steps in section 4.2 - Procedure to prime ERM ECO, to bring the ERM online.

4. Principles of Operation

4.1 General

The ERM ECO line pressure is set below the normal operating range of the primary supply. While the primary supply is functioning within it's design limits, the ERM ECO will not feed gas into the pipeline. If the primary supply fails, causing the pipeline pressure to fall to the ERM ECO set point it will automatically start feeding gas to the pipeline.

Table 4: Typical pressure settings for HTM02-01 primary and emergency medical gas supply system, during normal pipeline system operation.

	Pressure (Bar)	
Nominal System Design	4	7
Max. Static Pressure Primary Supply	4.6	8.2
Min. Dynamic Pressure Primary Supply	4.2	7.4
Max. Static Pressure ERM	4.0	7.2
Min. Dynamic Pressure ERM	3.5	6.5

Note - Table 4 shows typical examples. These figures may differ depending on the hospital's pipeline management policy.

⚠ CAUTION: It would be recommended to set the ERM ECO line pressure at least 0.2 bar below the main supply source pressure at full design flow to ensure the emergency manifold does not supply the pipeline during normal primary source operation.

The recommended setup of the ERM ECO is to have the left hand bank open and ready to come online and the right hand bank closed.

In the event of the primary system failing to supply (Awareness of the Primary supply failure is typically from central alarm system), the ERM ECO line regulator (see **figure 1**) can be manually increased to match the primary supply's nominal values, so that the full distribution pressure is restored.

When the ERM ECO is in operation there is provision for an alarm output to warn when the running bank contents is typically below half. The ERM ECO contents gauge should then be locally monitored. The Bank valves can be used to cycle the left and right banks allowing for empty cylinders to be changed while keeping continues supply to the pipeline.

⚠ CAUTION: The following procedures 4.2 to 4.7 are only typical guides, where there are conflicts with the hospital's emergency procedure, the hospital's policies will take precedence.

4.2 Procedure to prime ERM ECO.

4.2.1 The following procedure must be carried out once the commissioning (section 3) is complete and the system is ready to be put into use.

4.2.2 Ensure the high-pressure isolation valve on the left-hand bank is fully open, the right-hand bank isolation valve is closed, and all cylinder valves on both banks are fully closed. Correct as required, see section 4.7 Cylinder Operation.

4.2.3 Ensure the connecting pipeline is ready for use. Slowly open the line valve 'B' (Item 8, **figure 1**).

4.3 Procedure when mains supply fails.

4.3.1 The following steps relate to **figure 1 & 2**, and detail how to operate the ERM ECO in the event of the main supply system failing to supply gas at the correct distribution pressure.

4.3.2 Ensure the ERM ECO line valve 'B' is open. Close main supply line valve (Shown as valve 'A' in **figure 2**).

4.3.3 Ensure that one of the high-pressure bank isolation valves is fully open, the other bank isolation valve is closed, and all cylinder valves on both banks are fully closed. Correct as required.

4.3.4 The pressure regulator will be set below the nominal distribution system pressure. This should now be increased to the full distribution pressure by increasing the line regulator setting, until the correct distribution pressure can be obtained.

4.3.5 Once the ERM ECO is in operation there is provision for an alarm output to warn when the running bank contents is typically below half. The ERM ECO contents gauge should then be locally monitored for cycling the cylinder banks for continuous supply (see section 4.4 for bank cycling procedure).

4.4 Procedure to cycle banks & changing cylinders.

4.4.1 Refer to hospitals/site policy for safe cylinder handling (See section 4.6 for typical cylinder handling safety check list) when moving the cylinders into place ready for connection to the tailpipes.

4.4.2 When the running bank pressure falls to the pressure for changing cylinder (for typical changeover pressures see table 5). Slowly open the standby bank isolation valve (**see figure 1**). With the standby bank now operating as the running bank, close the high pressure isolation valve and cylinder valves for the empty cylinder bank.

Table 5: Typical cylinder bank changeover pressure.

Nominal Supply pressure	Typical Cylinder changeover
4 Bar	15 Bar (50 Bar Cyl. and Below)
4 Bar	20 Bar (137 Bar Cyl. and above)
7 Bar	30 Bar

Note - Values in table 5 are only for reference as a typical guide, refer to hospital emergency procedure policy.

4.4.3 For the empty cylinder/s disconnect the tailpipe from the cylinder (see **figure 13**) by either undoing the handwheel or unscrewing the nut at the cylinder end, depending on the cylinder connection type.

4.4.4 Replace the empty cylinder/s and reconnect the tailpipes. Slowly open the cylinder valves (see section 4.7 - Cylinder operation.

4.4.5 Repeat this section each time the running bank drops to the changeover pressure until the main supply is fully operational.

4.5 Procedure to reinstate main supply.

4.5.1 The following steps detail how to reinstate the mains supply once it has been returned to normal operation.

4.5.2 Slowly open valve 'A' (See **figure 2**).

4.5.3 Complete the steps in section 3, followed by 4.2

4.6 Typical Cylinder Handling Checklist

⚠ **CAUTION: Only persons who have had specific training in the safety of medical gases, manual handling techniques and cylinder changing procedures should be allowed to change cylinders on medical gas manifolds or medical equipment.**

- Safety shoes should be worn at all times. When moving larger cylinders, wear heavy protective gloves (preferably textile or leather). Keep all items clean and grease/oil free.
- Do not smoke or use naked lights.
- When handling smaller cylinders, the use of protective gloves may be inconvenient. Extra care should be taken to avoid injury and to make sure that hands are free from oil or grease BEFORE the cylinders are handled.
- Do not knock cylinders against each other or other solid objects.
- Do not drop or drag the cylinders.
- Do not use cylinders as rollers or wheel chocks.
- Do not lift any cylinder by its valve or cap
- Use appropriate trolley for larger cylinders.

4.7 Cylinder Operation

⚠ CAUTION: Undue force should not be used to open or close cylinder valves, or to attach connectors to cylinders.

⚠ CAUTION: ALL cylinder valves should be opened gently. TAPPING the operating key GENTLY with a soft-faced (copper) mallet is acceptable but undue force should not be used. If it is obvious that injury or damage could arise from trying to open a sticking valve, the cylinder should be removed from service and returned to the supplier as a faulty cylinder.

⚠ CAUTION: Opening cylinder valves SLOWLY will prevent a sudden rise in pressure in the system. It is at this time when there will be most stress on components and when most explosions will occur due to adiabatic compression of any oil or grease that may be present.

4.7.1 The cylinder valve should be FULLY opened (slowly, anti-clockwise) using the appropriate cylinder key or handwheel where fitted and then turned clockwise a quarter turn.

⚠ CAUTION: If there is any leakage of gas the cylinder should be removed from service and returned as faulty. DO NOT attempt to tighten gland nuts etc, as this may cause damage to the valve.

4.7.2 To close the valve, turn the spindle or handwheel clockwise. Hand pressure only should be used to close the valve.

5. Maintenance Procedures

A competent person who is conversant with the maintenance of high-pressure medical gas installations and any special national conditions, which may apply, must carry out all maintenance. Preventative maintenance contracts are available from **BeaconMedæs** for installations within the U.K., overseas distributors will be able to supply similar contracts in other areas.

⚠ WARNING: OBTAIN A WORK PERMIT (OR EQUIVALENT FOR OVERSEAS) BEFORE COMMENCING ANY WORK ON A MEDICAL GAS INSTALLATION.

5.1 Daily Inspection

5.1.1 Check visual indicators for correct function and damage.

5.1.2 If the ERM ECO is observed to be in operation on its “emergency reserve” bank, replacements for empty cylinders should be made available immediately.

5.1.3 Check manifold pressure gauges for abnormal conditions.

5.1.4 Check ERM ECO for unusual noises or vibrations.

5.2 Weekly

5.2.1 Check that all cylinders are properly secured and that batch labels are correct and in date.

5.3 Quarterly

5.3.1 Ensure that:

(a) when the duty (primary) manifold is running the reserve (secondary) manifold cylinders are full;
(b) all system pressures are normal;
(c) all alarms are showing “green” normal lamps;
(d) the automatic manifold main isolating valve is open; and
(e) the manifold is supplying the hospital.

5.3.2 Close the isolating valve on the ERM ECO slowly and confirm that there is no effect on the line pressure to the hospital.

5.3.3 Open all cylinder and header high-pressure isolating valves.

5.3.4 Check that the ERM ECO safety valves are not passing, by disconnecting their downstream exhaust coupling and inspecting for a gas leak and check the condition of the seals (See **figure 14**). Replace the valve or seals as necessary. Reconnect the exhaust pipework, ensure the O-ring seals are correctly in place.

Figure 14 - Relief Valve Inspection

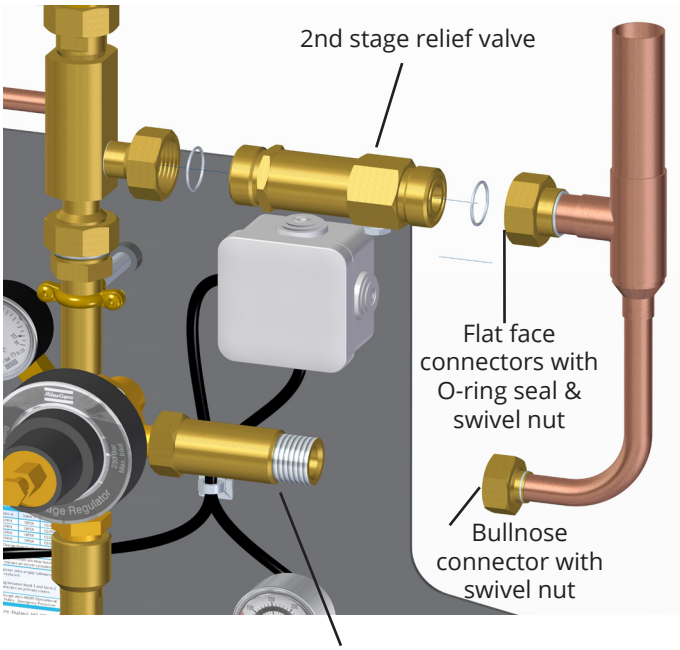

5.3.5 Close one cylinder valve and disconnect the tailpipe at the cylinder end (see **figure 15**). Listen for a leak from the tailpipe. A minor leak is permissible and likely but an obvious major leak denotes failure of the manifold non-return valve (NRV). If the latter happens, do not totally detach the tailpipe but instead retighten it and test other tailpipes in the same way. Any failed NRV's can be replaced (see section 6.8) after all cylinder valves have been closed and the system has been depressurised. Repeat this test when the new NRV's have been fitted (See **figure 15** and section 4.7 - Cylinder Operation).

Figure 15 - Manifold header Non-Return Valve Inspection.

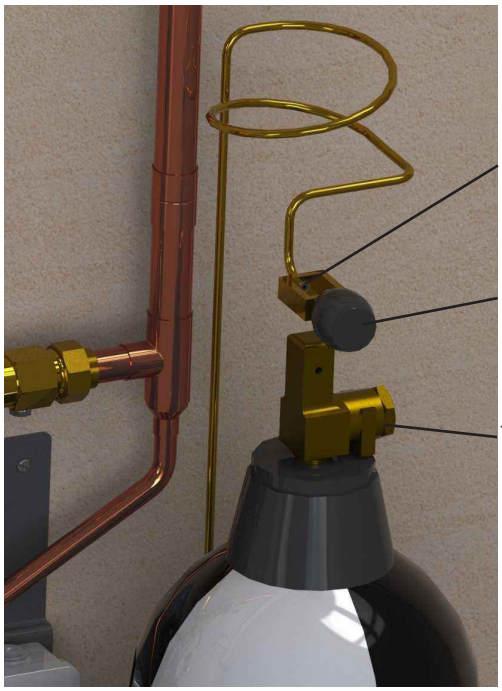

5.3.6 Ensure the line valve 'B' is closed and one cylinder and bank valve on 1 side of the ERM ECO is open (see **figure 1**). Open Valve 'C' and probe the sampling outlet to produce a steady flow and check the pressure on the line gauge does not dip by more than 10%. If possible attach a flowmeter to the sampling outlet and pipe away to a safe location while performing this test. Close valve 'C' when finished.

⚠ CAUTION: For anaesthetic and oxygen manifolds ensure that the manifold room is well ventilated and no potential ignition sources are present while running this test. Run this test for as short a time as possible. Oxygen can be absorbed into clothing etc., so once the test is complete it would be recommended to spend at least 20 minutes out doors to ensure the oxygen has released. During this time stay away from naked flame, do not smoke etc. Do not perform this test unless the risks can be kept within an acceptable level.

5.3.7 Check the static pressure of the regulator (should be typically as per table 4 in section 4). Observe this pressure for typically 10-20 minutes to ensure that there is no regulator creepage. Excessive creepage will necessitate replacement (see section 6.3) and a repeat of this test.

5.3.8 To test the "reserve low" contact gauge, open one cylinder/header isolating valve until the cylinder content gauge indicates full pressure, and then close the valve.

5.3.9 Open Valve 'C' and carefully bleed gas from the sampling outlet.

5.3.10 Observe the falling pressure on the contact gauge.

5.3.11 When the pressure falls to 14 bar for 100 bar scale, and 68 bar for the 315 scale gauges the contact will provide an open signal, initiating a "Reserve Low" alarm on the primary alarm system. Should this not occur replace the contact gauge (See section 6.10).

5.3.12 Repeat steps 5.3.8 to 5.3.11 for the opposite contact gauge. Close valve 'C' when finished.

5.3.13 Finally, tighten all joints, open all cylinder valves and perform a leak test on all joints.

5.3.14 Perform the steps in section 4.2 - Procedure to prime ERM ECO.

5.3.15 The ERM ECO is now ready for use.

5.4 5 Years

Replace the pressure safety valve for a new certified relief valve, see sections 6.4 & 6.5.

5.5 As Required

Replace tailpipes, pressure safety valve, pressure regulator, high-pressure isolation valve, isolation valves, contact gauges, non-return valve etc. as and when required (see section 6.0 to 6.10).

6.0 Component Replacement Procedures

⚠ WARNING: IT IS ESSENTIAL THAT ONLY GENUINE BEACONMEDÆS SPARE PARTS ARE FITTED DURING MAINTENANCE.

⚠ CAUTION: Ensure no contaminates, oil or grease come into contact with any of the gas connection/ internals.

6.1 Preparation For Component Replacement

6.1.1 Ensure the main gas supply system is functioning correctly and supplying the pipeline.

6.1.2 Close the ERM ECO line isolation valve 'B' (See figure 1). Close all the cylinder and open both bank valves (see figure 1 and 2).

6.1.3 Open the sampling outlet valve 'C', and probe the outlet to depressurise the system.

⚠ CAUTION: When exhausting anaesthetic and oxygen manifolds ensure that the manifold room is well ventilated and no potential ignition sources are present.

Note - If the cylinder contents gauges are not rapidly dropping in pressure, stop draining the system and check all cylinders are correctly isolated.

6.2 Replace line non-return valve (P/N: 2005778)

6.2.1 Complete steps in section 6.1 before carrying out any component replacement on the ERM ECO.

6.2.2 Slowly turn the swivel nut of the top 1" connection. If the you hear gas escaping do not fully unscrew the joint until the system is fully drained.

Figure 16 - Line Non-return Valve Replacement

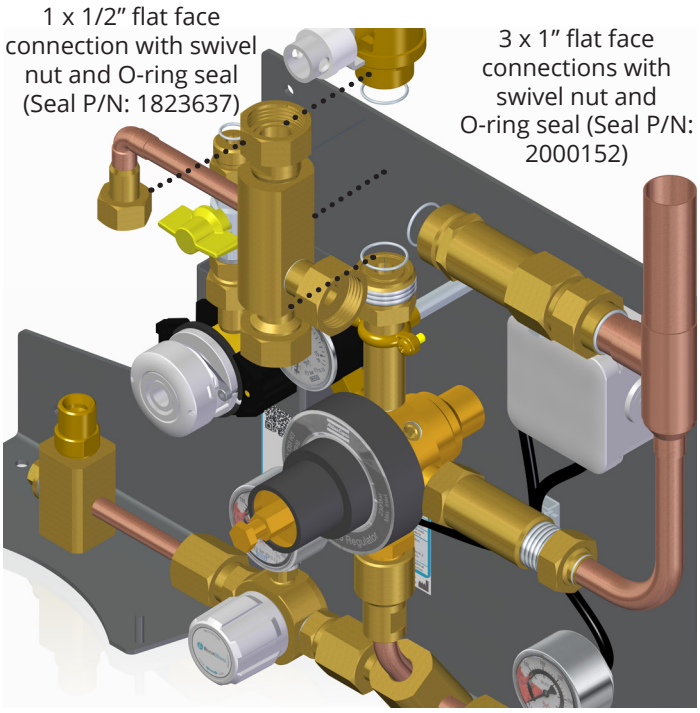

6.2.3 Fully disconnect all 4 joints as shown in **figure 16** and gently remove the unit by sliding it towards you. Take care not to damage the seals.

6.2.4 Inspect the existing seals and replace if required, see **figure 16** for seal part numbers.

6.2.5 Taking care not to damage the O-ring seals replace the new non-return valve as shown in **figure 16**, and fasten the 4 flat face joints.

6.2.6 Follow steps in section 6.10 bring the ERM ECO back online.

6.3 Replace Sampling Outlet (See table 6 for part numbers)

Table 6 : Sampling Outlet Part Numbers

GAS Type	1st Fix	2nd Fix
Oxygen (O2)	2005810	8102340200
Nitrous Oxide (N2O)	2005811	8102340201
Oxygen/Nitrous Oxide (O2/N2O)	2005812	8102340202
Medical Air	2005813	8102340203
Surgical Air	2005814	8102340204
Nitrogen (N2)	2005816	8102340206
Carbon Dioxide (CO2)	2005815	8102340207

6.3.1 The Sampling outlet can be worked on without taking the ERM ECO off line.

6.3.2 Ensure the sampling outlet isolation valve 'C' is closed (as shown in **figure 17**).

6.3.3 Probe the outlet to depressurise.

6.3.4 To replace the whole outlet, disconnect the 1/2" connection and remove the 2 x M4 cap head set screws. Ensure the replacement unit is the correct gas type. Replace the new outlet by connecting the 1/2" connection, ensure the O-ring is in place (Replace if damaged, see **figure 17** for part numbers. Secure the unit with the M4 cap head and washers.

Figure 17 - Sampling Outlet Replacement

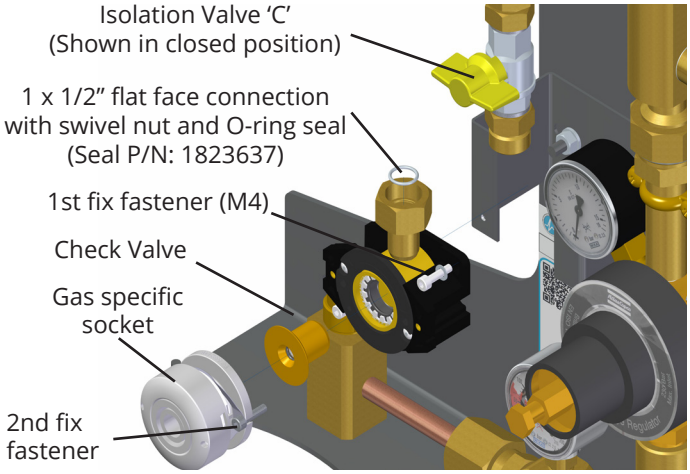

6.3.5 For replacing the 2nd fix only (see **figure 17**). Remove the 2nd fix fasteners, through the access holes located in the front of the outlet. Slide off the 2nd fix and check valve capsule.

6.3.6 Fit the new check valve and gas specific socket assembly. Secure in place with the 2nd fix fasteners.

6.3.7 After replacing the sampling outlet (entire outlet or just the 2nd fix) probe the outlet to ensure the locking mechanisms functions correctly.

6.3.8 Open valve 'C' and check for leaks. If leaks are found, before attempting to rectify close valve 'C' and probe the outlet to depressurise. Repair the leak and repeat steps in 6.2 as required.

6.3.9 Close valve 'C' when replacement complete.

6.4 Replace multi-stage regulator

6.4.1 Complete steps in section 6.1 before carrying out any component replacement on the ERM ECO.

6.4.2 To replace the multi-stage regulator slowly release the swivel nut connecting the Line Non-return Valve Assembly. If the you hear gas escaping do not fully unscrew the joint until the system is fully drained.

6.4.3 Disconnect the Relief Exhaust Connection and loosen the swivel nuts connecting the center block assembly allowing the regulator assembly to swivel towards you.

6.4.4 Fully disconnect the joints as shown in **figure 18** and gently remove the regulator assembly by sliding it towards you. Take care not to damage the seals.

6.4.5 If necessary, remove the pressure gauges, regulator outlet adaptor and copper crush washers and fit to the new regulator, see **figure 18** for part numbers.

Figure 18 - Multi-stage Regulator Replacement

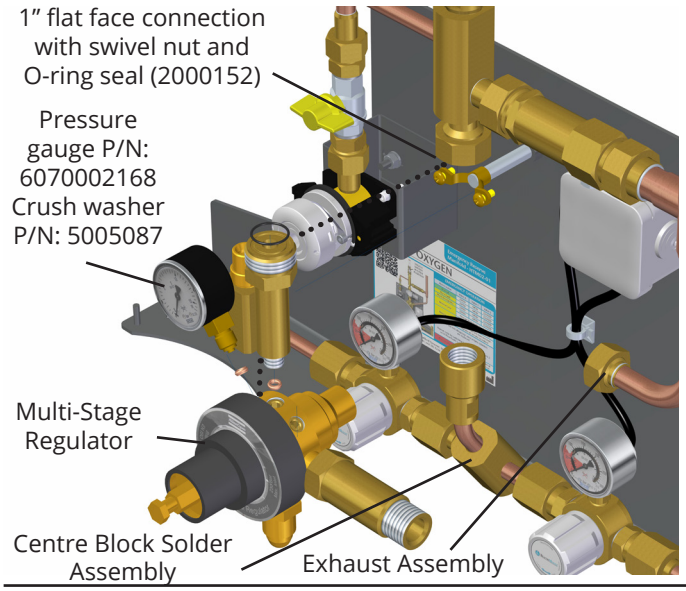

6.4.6 Install the regulator in the centre block solder assembly and partially tighten the connection.

6.4.7 Reconnect the regulator, swivelling the assembly back in place and tighten all connections. Take care not to damage the seals.

6.4.8 Fully tighten the regulator inlet connection. Check that all disturbed joints have been re-tightened.

6.4.9 Follow steps in section 6.10 to bring the ERM ECO back online.

6.5 Replace 2nd stage relief valve (See table 7 for part numbers)

Table 7: 2nd Stage Relief Valve Part Numbers

Nominal Line Pressure	Relief Set Pressure	Part Number
4 Bar	5.3 bar	2000122
7 Bar	11 bar	2000123

6.5.1 Complete steps in section 6.1 before carrying out any component replacement on the ERM ECO.

6.5.2 Slowly turn the left hand 1" swivel nut connection. If the you hear gas escaping do not fully unscrew the joint until the system is fully drained.

6.5.3 Fully disconnect the two 1" joints as shown in **figure 19** and gently remove the unit by sliding it towards you. Take care not to damage the seals.

6.5.4 Inspect the existing seals and replace if required, see **figure 19** for seal part numbers. Remove the 1/8 blanking plug from the old relief valve and fit to the new unit.

6.5.5 Taking care not to damage the O-ring seals replace the new relief valve as shown in **figure 19**, and fasten the 2 flat face joints.

6.5.6 Follow steps in section 6.10 to bring the ERM ECO back online.

Figure 19 - 2nd Stage Relief Valve Replacement

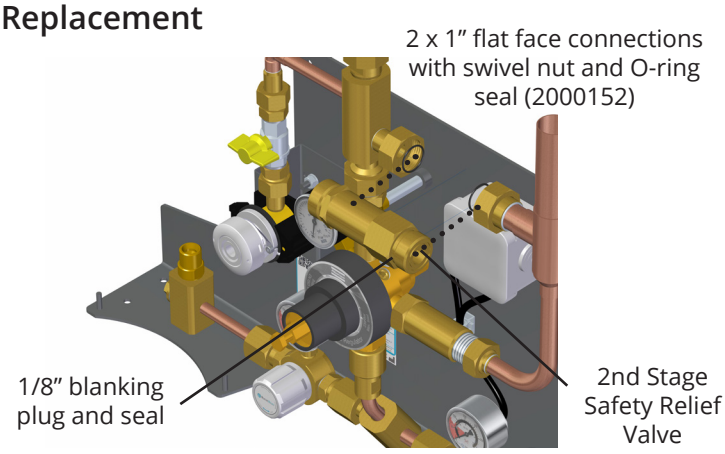

6.6 Replace High Pressure Bank Valve (P/N: 2212020165)

6.6.1 Complete steps in section 6.1 before carrying out any component replacement on the ERM ECO.

6.6.2 Slowly turn 1 of the 5/8" swivel nut connections. If you hear gas escaping do not fully unscrew the joint until the system is fully drained.

6.6.3 Fully disconnect the two 2 joints as shown in **figure 20** and gently remove the unit by sliding it towards you. Take care not to damage the seals.

6.6.4 Remove the contact gauge from the old valve. Take note of the direction label on the underside of the base of the valve, fit the gauge as per the old valve unit. Inspect the existing seals and replace if required, see **figure 20** for seal part numbers.

6.6.5 Taking care not to damage the O-ring seals replace the new valve as shown in **figure 20**, and fasten the 2 flat face joints.

6.6.6 Fully open the valve unit and stick the label onto the handle so the **"BeaconMedæs"** logo is horizontal

6.6.7 Follow steps in section 6.10 to bring the ERM ECO back online.

Figure 20 - Cylinder Bank Valve Replacement

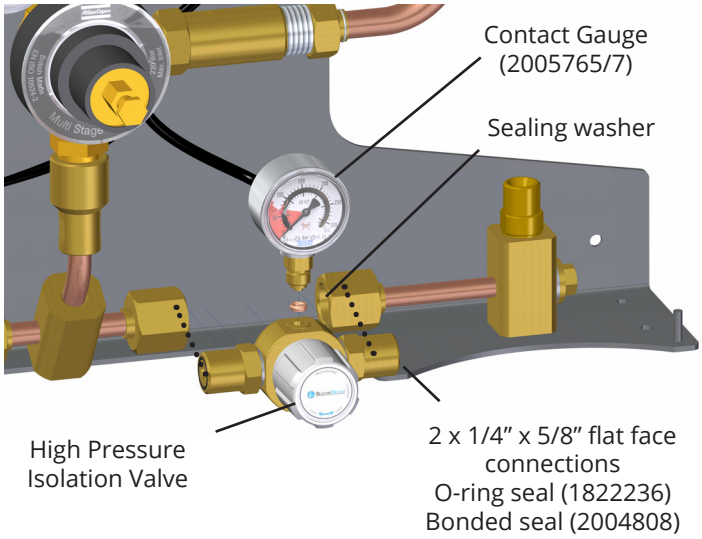

6.7 Replace Cylinder Header Non-return Valves (see table 8 for part numbers)

Table 8: Header Non-return Valve Part Numbers

GAS Type	Part Numbers
Oxygen (O2)	2000288
Nitrous Oxide (N2O)	2000289
Oxygen/Nitrous Oxide (O2/N2O)	2000290
Medical Air	2000291
Nitrogen (N2)	2000292
Carbon Dioxide (CO2)	2005850

6.7.1 Complete steps in section 6.1 before carrying out any component replacement on the ERM ECO.

6.7.2 Slowly turn the swivel nut of the tailpipe connection. If you hear gas escaping do not fully unscrew the joint until the system is fully drained.

6.7.3 Fully disconnect the tailpipe joints as shown in **figure 21**. Start to unscrew the non-return valve, if the you hear gas escaping do not fully unscrew the joint until the system is fully drained. Fully disconnect the non-return valve.

6.7.4 Inspect the existing seals and replace if required, see f**igure 21** for seal part number.

6.7.5 Reconnect the tailpipe to the non-return valve.

6.7.6 Follow steps in section 6.10 to bring the ERM ECO back online.

Figure 21 - Cylinder Header Non-return Valve Replacement

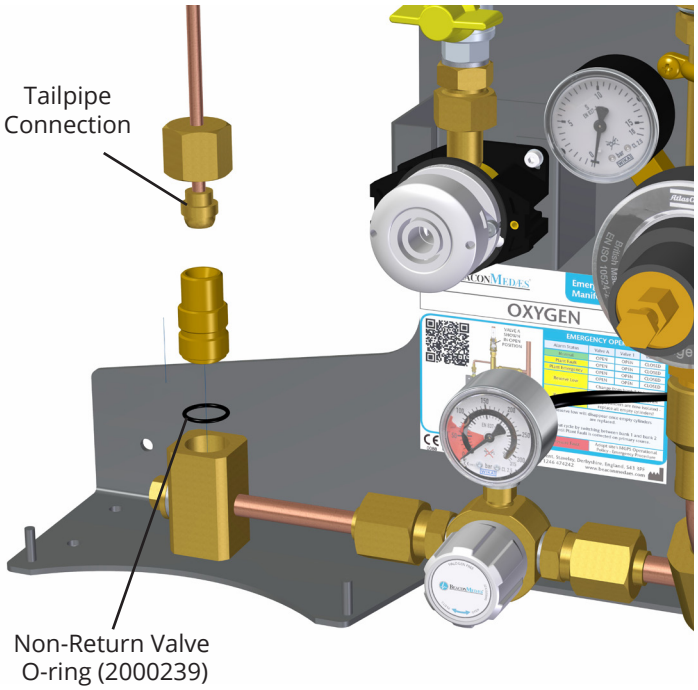

6.8 Replace Line Pressure Gauge

⚠ CAUTION: Ensure the new gauge has the same scale as the one being replaced.

6.8.1 Complete steps in section 6.1 before carrying out any component replacement on the ERM ECO.

6.8.2 Follow instructions in section 6.4 (Replace multi-stage regulator) to gain full access to the line pressure gauge.

6.8.3 Start to unscrew the line pressure gauge, see **figure 22**.

6.8.4 Replace the old seals with those supplied with the new gauge.

6.8.5 Fit the new gauge as per the old unit. Refer to section 6.4 to reconnect the regulator assembly.

6.8.6 Follow steps in section 6.10 to bring the ERM ECO back online.

Figure 22 - Line Pressure Gauge Replacement

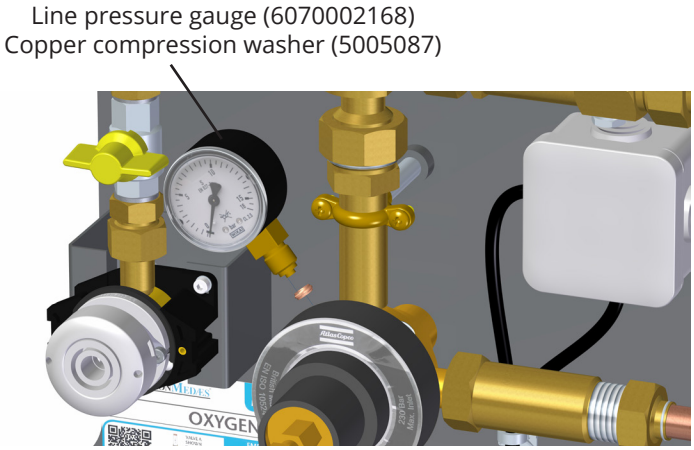

6.9 Replace Cylinder Contents Contact Gauge (See table 9 for part numbers.

Table 9: Line Pressure Contact Gauge Part Numbers

Switch point	Part Number
14 Bar (100 Bar Scale)	2005772
68 Bar (315 Bar Scale)	2005773

Note - 14 bar switch point typically used on N2O and CO2. 68 bar switch point typically used for O2, O2/N2O, Medical Air, Surgical Air and N2O.

⚠ CAUTION: Ensure the new gauge has the same scale and alarm contact as the one being replaced.

6.9.1 Complete steps in section 6.1 before carrying out any component replacement on the ERM ECO.

6.9.2 Disconnect the contact alarm wire, see **figure 23.**

6.9.3 Start to unscrew the line pressure gauge, if you hear gas escaping do not fully remove until the system is fully drained, see **figure 24**. If required disconnect the high pressure bank valve to gain access to the contact gauge (see section 6.6 - Replace High Pressure Bank Valve, for procedure).

6.9.4 Replace the old compression seal with the replacement supplied with the new gauge.

6.9.5 Fit the new gauge as per the old unit including wiring as per **figure 23**.

6.9.6 Follow steps in section 6.11 to bring the ERM ECO back online.

Figure 23 - Reserve Low Contact Gauge Alarm Wiring

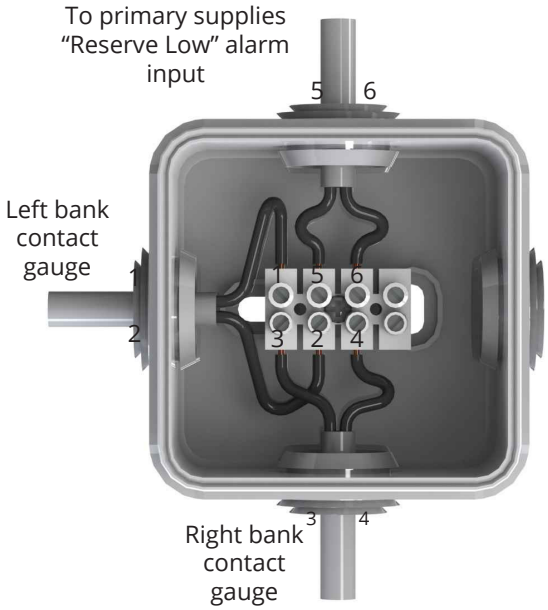

Figure 24 - Reserve Low Contact Gauge Replacement

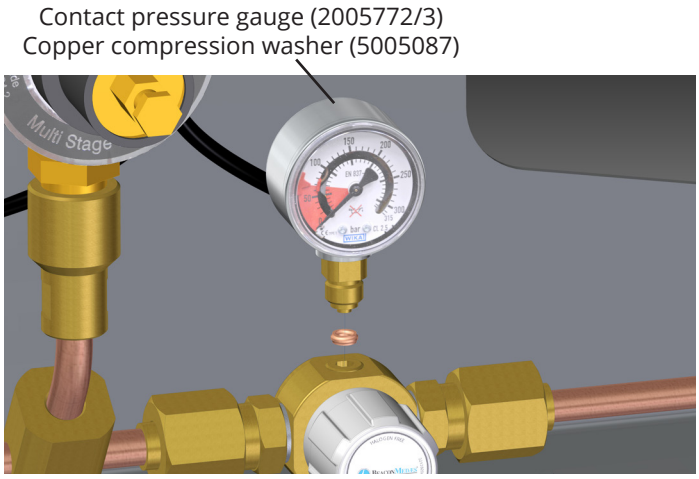

6.10 Returning the ERM ECO Back online

6.10.1 After completing any repair work on the ERM ECO complete the step in section 3 - Commissioning, followed by section 4.2 - Procedure to prime ERM ECO.

Note - The panel may need to be purged as per HTM 02-01 for UK installations, or as per relevant standards if installed outside the UK.

7. Recommended Spares and Accessories

7.1 Spares scheduling

The recommended spares holding is shown in table 11, the number recommended spares for overseas customers are expressed in brackets and take into account expected transport delays (see table 11).

Part Number	Description
2212020149	5 Year Overhaul Kit Oxygen
2212020150	5 Year Overhaul Kit Nitrous Oxide
2212020151	5 Year Overhaul Kit Oxygen/Nitrous Oxide
2212020152	5 Year Overhaul Kit Medical Air
2212020153	5 Year Overhaul Kit Surgical Air 7 bar
2212020154	5 Year Overhaul Kit Nitrogen 7 bar
2212020155	5 Year Overhaul Kit Carbon Dioxide

Note - It is mandatory to replace 1st and 2nd stage relief valves every 5 years.

To accompany the replacement of relief valves an overhaul kit has been defined to include non return valves (header and main line), associated seals/washers and outlet capsule along with the 2nd stage relief valves.

BeaconMedæs advise to replace these additional components when the ERM ECO is shut down for it's major relief valve service.

Note the kits are sized for the standard 2x1 ERM. For systems larger than this additional NRV capsules and tailpipe seals are required for each cylinder/tailpipe connection. See table 10 for details.

Note - industrial regulators are recommended to be replaced every 5 years. Whilst the medical standards do not specifically identify the need to replace the regulators within this time scale it should be considered good practice to do so. By replacing the regulators whilst the relief valves are being replaced interruption of supply is minimised.

BeaconMedæs therefore advise that the multi-stage regulator is also replaced during the 5 year overhaul of the ERM ECO control panel.

Table 10: Header Extension Kits

Gas ID	Control Panel 2x1 Part Nº	
	ERM	ERM ECO[1]
Oxygen	2005747	8102341736
Nitrous Oxide	2005748	8102341737
Oxygen / Nitrous Oxide	2005749	8102341738
Medical Air	2005750	8102341739
Surgical Air, 7 bar	2005751	8102341740
Surgical Air, 11 bar	2005752	n/a
Carbon Dioxide	2005753	8102341741
Nitrogen, 7 bar	2005754	8102341742
Nitrogen, 11 bar	2005755	n/a

Extension Items Table

Gas Type	2x2	2x3	2x4	2x5	2x6	2x7
Oxygen	8102371280	8102371281	8102371282	8102371283	8102371284	8102371285
Nitrous Oxide	8102371286	8102371287	8102371288	8102371289	8102371290	8102371291
Entonox O2/N2O	8102371292	8102371293	8102371294	8102371295	8102371296	8102371297
Medical Air	8102371298	8102371299	8102371300	8102371301	8102371302	8102371303
Nitrogen	8102371304	8102371305	8102371306	8102371307	8102371308	8102371309
Carbon Dioxide	8102371310	8102371311	8102371312	8102371313	8102371314	8102371315

Table 11: Spares scheduling

Item ID	Part Number	ERM Description	Quantity req./ Number of Panels	
			<5	>5
1	2005773	Contact Gauge – 0-315 bar/68 bar Falling	1(2)	2(2)
	2005772	Contact Gauge – 0-100 bar/14 bar Falling	1(2)	2(2)
2	2212020163	Multi-Stage Regulator - 4 bar	1(2)	2(2)
	2212020164	Multi-Stage Regulator - 7 bar	1(2)	2(2)
3	2212020165	HP Isolation Valve As-sembly	1(2)	2(2)
4	6070002168	Line Gauge – 16 bar	1(1)	1(2)
5	2005778	Manifold block c/w Non-Return Valve	1(1)	1(2)
6	2000122	Relief Valve – 5.3 bar	2(2)	3(4)
	2000123	Relief Valve – 11 bar	2(2)	3(4)
7	1823637	'O' Ring – 12.1 I/D x 1.6 CSA	2(4)	2(4)
8	1822236	'O' Ring – 15.1 I/D x 1.6 CSA	2(4)	2(4)
9	2000152	'O' Ring – 22.1 I/D x 1.6 CSA	2(4)	2(4)
10	2004808	1/4" Bonded Seal	2(4)	2(4)
11	1824977	3/8" Bonded Seal	2(4)	2(4)
12	2212020167	Line Valve c/w o-ring kit	1(2)	2(2)
13	2000288	Header Non-Return Valve Kit, O2	1(2) per Cylinder	
	2000289	Header Non-Return Valve Kit, N2O	1(2) per Cylinder	
	2000290	Header Non-Return Valve Kit, O2/N2O	1(2) per Cylinder	
	2000291	Header Non-Return Valve Kit, AIR	1(2) per Cylinder	
	2000292	Header Non-Return Valve Kit, N2	1(2) per Cylinder	
	2005625	Header Non-Return Valve Kit, CO2	1(2) per Cylinder	
14	2000172	Test Point Isolation Valve	1(2)	2(2)
15	2005775	Alarm Terminal Box	1(1)	1(1)
16	8102340200	Gem Shield 2nd fix - Oxygen (O2)	1(1)	1(2)
	8102340201	Gem Shield 2nd fix - Nitrous Oxide (N2O)	1(1)	1(2)
	8102340202	Gem Shield 2nd fix - Oxygen/Nitrous Oxide (O2/N2O)	1(1)	1(2)
	8102340203	Gem Shield 2nd fix - Medical Air	1(1)	1(2)
	8102340204	Gem Shield 2nd fix - Surgical Air	1(1)	1(2)
	8102340206	Gem Shield 2nd fix - Nitrogen (N2)	1(1)	1(2)
	8102340207	Gem Shield 2nd fix - Carbon Dioxide (CO2)	1(1)	1(2)
17	5005087	Copper Sealing Washer - Gauge	2(4)	4(6)
18	2000239	'O' Ring - NRV capsule	2(4)	4(6)

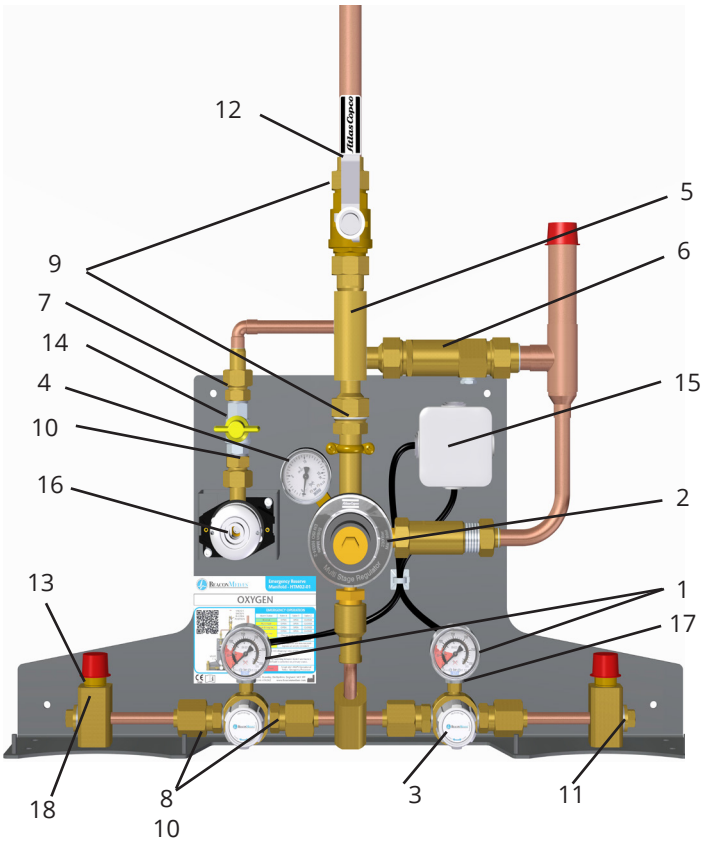

BeaconMedæs®

Tel: +44 (0) 1246 474242
www.beaconmedaes.com

EC REP

Atlas Copco Airpower n.v.
Boomsesteenweg 957
2610 Wilrijk - Belgium

Atlas Copco Ltd. trading as Atlas Copco Medical
Unit 18 Nuffield Way, Abingdon, Oxfordshire, UK OX14 1RL

CE 0088