# Installation, Operation and Maintenance Instructions

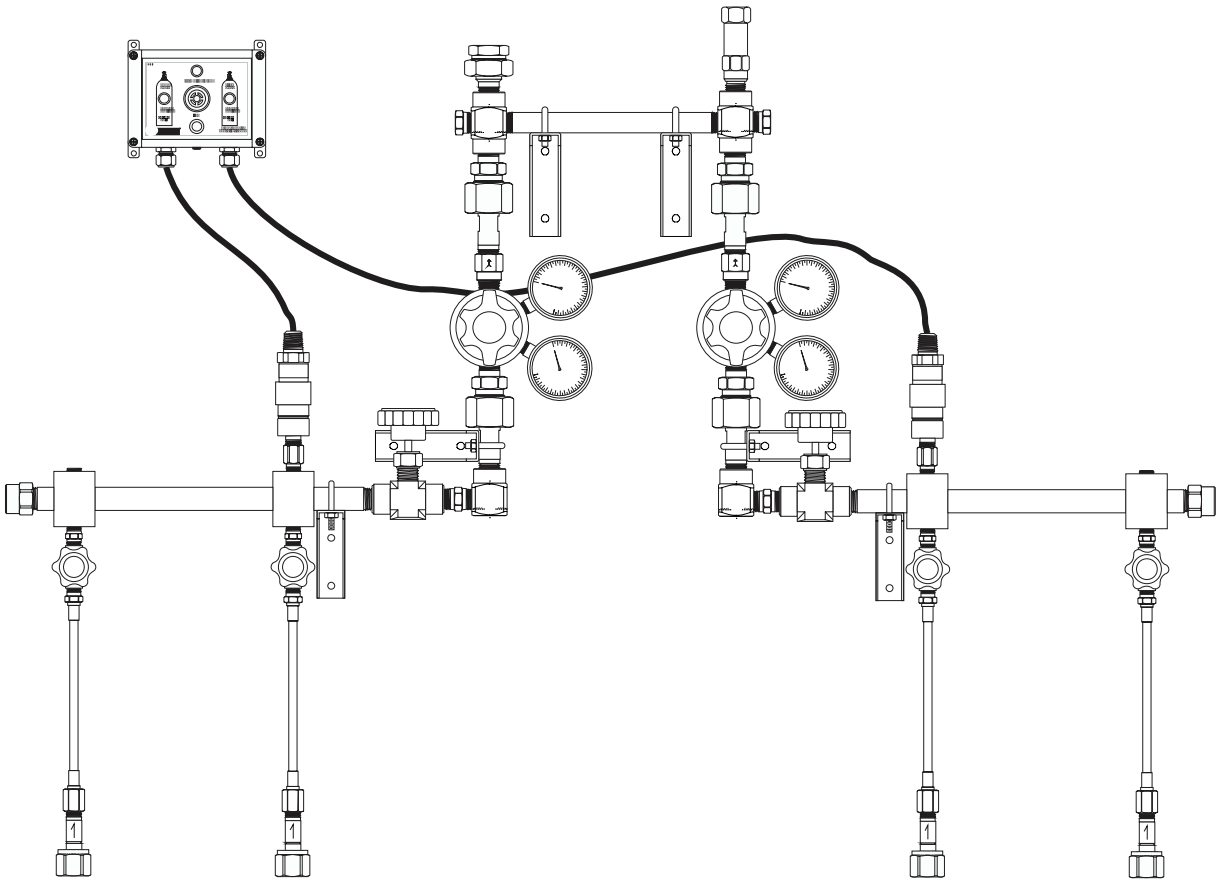

# Open-Style Semi-Automatic Switchover Manifolds For High Pressure Cylinders

*Part number 2205 6105 06*

*Revision 00*

*June 9, 2016*

BeaconMedæs®

# Installation, Operation and Maintenance Manual

## Open-Style Semi-Automatic Switchover Manifolds For High Pressure Cylinders

This unit is purchased from: _____

Date purchased: _____

Model number: _____

Serial number: _____

Option(s) included: _____

Any information, service or spare parts requests should include the machine serial number and be directed to:

BeaconMedæs
1800 Overview Drive
Rock Hill, SC 29730

Telephone: (888) 463-3427
Fax: (803) 817-5750



*Part number 2205 6105 06*
*Revision 00*
*June 9, 2016*

# Table of Contents

## Safety Precautions

Protect yourself and others. Read and understand the following instructions before attempting to use this equipment. Failure to understand and follow these instructions could result in serious personal injury and/or damage to equipment. Because of the many potential hazards associated with gases, read the Material Safety Data Sheet for each gas you will be using.

- Know and understand the physical and chemical properties of the gas being detected.
- Observe general precautions for the use of gases.
- Observe safety precautions for the gas being used.
- Read and follow precautions on cylinder labels.
- Never use these regulators with gases not compatible with the materials of construction. The use of gases not compatible with the materials of construction may cause damage to equipment or injury to personnel.
- If flammable gases are used with compressed gas equipment do not locate it near open flames or any other source of ignition.
- If toxic or flammable gases are used with compressed gas equipment, emergency equipment applicable to the gases in use should be available in operating area.
- Many gases can cause asphyxiation by displacing oxygen in the atmosphere. Make certain the area where compressed gas equipment is operated is well ventilated. Provide a device to warn personnel of oxygen depletion in the work area.
- Do not release toxic or flammable gases in the vicinity of personnel. Use compressed gas equipment only in well ventilated areas. Vent gases to the outside atmosphere, and in an area away from personnel. Be sure that venting and disposal methods are in accordance with Federal, State, Provincial and local requirements. Locate and construct vent lines to prevent condensation or gas accumulation. Be sure the vent outlet cannot be obstructed by rain, snow, ice, insects, birds, etc. Do not inter-connect vent lines; if more than one vent is needed, use separate lines.
- Relief devices should be installed and properly vented in all gas handling systems to protect against equipment failure and over-pressurization.
- Never connect this equipment to a supply source having a pressure greater than the maximum rated pressure. Refer to the Product Specifications for maximum inlet pressures.
- Never permit oil, grease, or other combustible materials to come in contact with cylinders, regulators, and connections. Oil and grease may react and ignite when in contact with some gases – particularly oxygen and nitrous oxide.
- Cylinder, header, and master valves should always be opened very s-l-o-w-l-y. Heat of recompression may ignite combustible materials.
- Flexible hoses should never be kinked, twisted, or bent into a radius smaller than 3 inches. Mistreatment may cause the flexible hoses to burst.
- Do not apply heat. Some materials may react and ignite while in contact with some gases – particularly oxygen and nitrous oxide.
- Cylinders should always be secured with racks, chains, or straps. Unrestrained cylinders may fall over and damage or break off the cylinder valve which may propel the cylinder with great force.
- Oxygen regulators and cylinders should be grounded. Static discharges and lightning may ignite materials in an oxygen atmosphere, creating a fire or explosive force.
- Welding should not be performed near nitrous oxide piping. Excessive heat may cause the gas to dissociate, creating an explosive force.
- Do not use leak test solution that contains ammonia. Solutions containing ammonia may cause brass tubing to crack.
- Always use oxygen compatible leak test solution on oxygen or nitrous oxide service equipment.

## Abbreviations

| | | | |
|---|---|---|---|
| **C** | Common | **OSHA** | Occupational Safety & Health Administration |
| **CGA** | Compressed Gas Association | **PSIG** | Pounds per Square Inch Gauge |
| **FT-LBS** | Foot-Pounds | **SCFH** | Standard Cubic Feet per Hour |
| **IN-LBS** | Inch-Pounds | **VAC** | Voltage, Alternating Current |
| **N/C** | Normally Closed | **VDC** | Voltage, Direct Current |
| **N/O** | Normally Open | **PCB** | Printed Circuit Board |
| **NPT** | National Pipe Taper | | |

## Introduction

BeaconMedaes Simplex Manifolds are cleaned, tested and prepared for indicated gas service and are built following National Fire Protection Association and Compressed Gas Association guidelines. The manifold consists of two (2) pressure reducing regulators, two (2) header bars, hose(s) or rigid pigtail(s), optional isolation valves, optional vent valves, designed to provide a gas supply for a specific gas application. The optional alarm signal connections and lights show system status and alert the need to replace depleted cylinders.

## Disclaimer

BeaconMedæs shall not be liable for errors contained herein or incidental or consequential damages in connection with providing this manual or the use of material in this manual.

## Warning

Our equipment is primarily intended for use in compressed gas systems. BeaconMedæs products are designed for use by persons technically trained in the proper use and safe handling of gas delivery systems. Due to the high pressure and hazardous gases employed in these processes, misapplication could result in injury or death. BeaconMedæs expressly warns against the sale to, or use of our products by, anyone other than professionally trained personnel. Do not use this equipment where pressures and temperatures can exceed those listed under Section 1.3.

Through misuse, age, or malfunction, components used with inert, combustible, corrosive, toxic, or oxidizing gases can fail in various modes. The system designer is warned to consider the failure modes of all component parts used with the above mentioned gases and to provide adequate safeguards to prevent personal injury or damage to equipment in the event of such failure modes. Adequate safeguards can be, but are not limited to:

- Pressure relief devices adequately piped to a safe location;
- Gas detection devices connected to a proper warning audible and visual alarm;
- Automatic shutoff valves and/or manual shutoff valves with an emergency stop push button;
- Self-contained breathing apparatus;
- Pipeline purge system with inert gas;
- Fire extinguishers and/or automatic sprinklers.

**System designers must provide a warning to end users in the systems instructional manual if protection against a failure mode cannot be adequately provided for.**

It should be recognized that warnings are valid for any equipment, regardless of manufacturer, and are not restricted to equipment manufactured by BeaconMedæs. BeaconMedæs's reputation for equipment quality performance is well established. We feel we have the additional obligation to provide information or warnings to customers to assist them in applying our equipment in a reasonable and safe manner.

## Manufacturer Statement

The information contained in this instruction manual has been compiled by BeaconMedæs, from what it believes are authoritative sources, and is offered solely as a convenience to its customers. While BeaconMedæs believes that this information is accurate and factual as of the date printed, the information, including design specifications, is subject to change without prior notice.

## Design Changes

In line with our commitment to continuous improvement, BeaconMedæs reserves the right to make design modifications or discontinue manufacture of any equipment without prior notice.

## Trademarks Used in this Manual

Buna-N, Delrin, Kalrez, Teflon, Tefzel, Vespel, Viton and Viton-A are trademarks of E.I. DuPont de Nemours & Company Monel is a trademark of Inco Alloys International, Inc. Kynar is a trademark of Atochem North America, Inc. Snoop is a trademark of Nupro Company Swagelok is a trademark of Crawford Fitting Company Hastelloy is a trademark of Union Carbide Corporation VCR is a trademark of Cajon Company

## Warranty

The Seller expressly warrants that the products manufactured by it will be free from defects in material, workmanship and title at the date of shipment. This warranty is exclusive and is in lieu of all implied or statutory warranties (including without limitation, warranties as to merchantability or fitness for a particular purpose, or arising from course of dealing of usage or trade) or any other express or implied warranties or representations.

All claims under this warranty must be made in writing and delivered to the seller prior to the expiration of 1 year from the date of shipment from the factory, or be barred. Upon receipt of a timely claim, the seller shall inspect the item or items claimed to be defective, and seller shall, at its option, modify, repair, or replace free of charge, any item or items which the seller determines to have been defective at the time of shipment from the factory, excluding normal wear and tear. Inspection must be performed at the seller's plant and in such event, freight for returning items to the plant shall be paid by Buyer. Seller shall have no responsibility if such item has been improperly stored, installed, operated, maintained, modified and/or repaired by an organization other than the seller. Adjustment for products not manufactured by Seller shall be made to the extent of any warranty of the manufacturer or supplier thereof. The foregoing shall be the Seller's sole and exclusive liability and buyer's sole and exclusive remedy for any breach of warranty or for any other claim based on any defect in, or nonperformance of, the products whether based on breach of contract or in tort, including negligence or strict liability.

# 1.0 General Information

## 1.1 Component Description

The system uses two high purity pressure reducing regulators. In order to have a switchover process take place, one regulator must be set at 10-15 psig higher than the other regulator. The gas will flow from the regulator having the highest set pressure. When the inlet pressure of the regulator set at the higher delivery pressure falls below the delivery pressure of the other regulator, the switchover will occur. Should you want to draw from this new cylinder bank, the delivery pressure of that regulator must be adjusted by an operator to 10-15 psig higher than the other regulator.

BeaconMedaes offers a remote alarm box as an option with all manifolds. The alarm box is equipped with lights and an audible alarm to warn the operator when the bank pressure is low. The NEMA 4 pressure switches are field adjustable.

The single stage, high purity and high flow pressure reducing regulators come standard with a stainless steel diaphragm. Should you requirea different pressure reducing regulator style, please call BeaconMedaes for details.

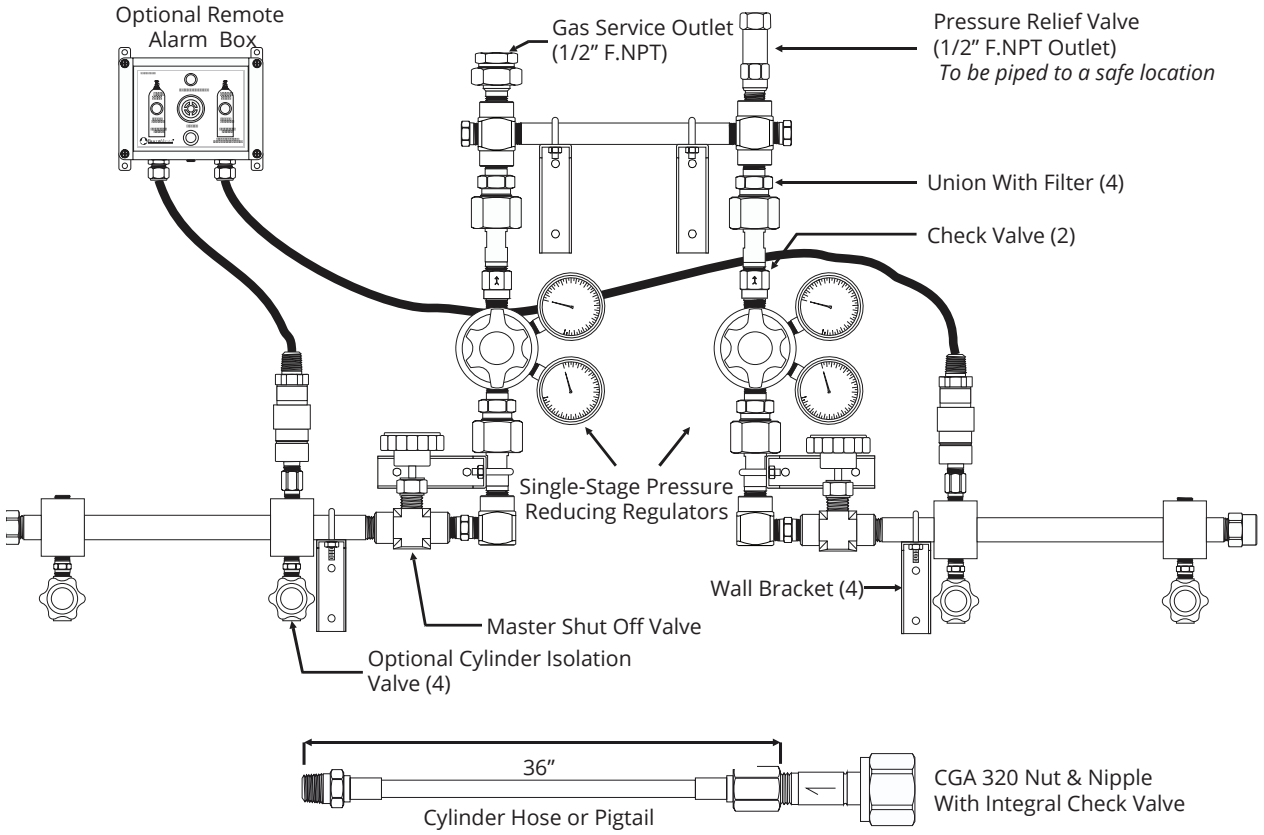


**Figure 1.1 - Open-Style Manifolds Component Description**

## 1.2 Typical Settings and Configurations

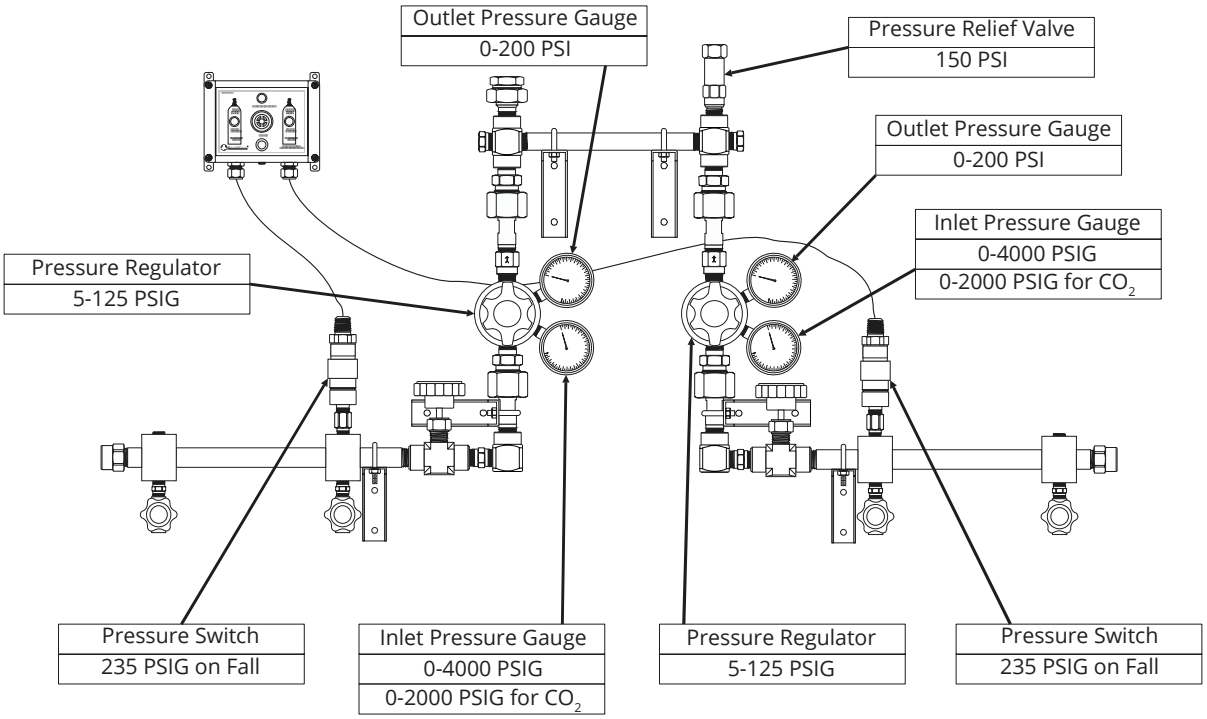


**Figure 1.2 - Open-Style Manifolds Configurations**

**Flexible Hoses**

**Flexible hose/rigid pigtail selection is critical to get the best performance from your manifold. We offer five types of hoses/pigtails:**

- Thermoplastic Hoses
- Teflon Core Hoses
- Stainless Steel Hoses
- Copper Rigid Pigtails
- Stainless Steel Rigid Pigtails

**For additional safety, stainless steel hoses are available with:**

- Armor guard

**As a standard feature, each hose has:**

- A check valve in the CGA nipple

**Finally, we offer three cylinder hose connections (all CGA / gas related)**

- Standard CGA nut & nipple
- Quick connects (zip nuts)
- Hand tight nuts

**Hydrogen & Helium Flexible Hoses**

Helium and hydrogen are very small molecules that permeate through Teflon and Nylon. All BeaconMedaes gas cylinder stationary discharging stations are mounted with stainless steel hoses or rigid pigtails for helium and hydrogen service.

**Oxygen Service Equipment**

All oxygen and nitrous oxide service equipment made by BeaconMedaes is cleaned as per the requirements of CGA G-4.1-1996.

**CAUTION**

Remove all protective caps prior to assembly. The protective cap may ignite due to heat of recompression in an oxygen system.

## 1.3 Ordering Information

OSA3000 – ☐ – ☐ – ☐ – ☐ – ☐ – ☐ – ☐

| Gas | Inscribe |
|---|---|
| Air - compressed | CGA 346 |
| Argon | CGA 580 |
| Argon mix | CGA 580 |
| Carbon dioxide* | CGA 320 |
| Helium | CGA 580 |
| Hydrogen | CGA 350 |
| Argon/methane | CGA 350 |
| Nitrogen | CGA 580 |
| Air - industrial | CGA 590 |
| Nitrous Oxide* | CGA 326 |
| Oxygen | CGA 540 |
| Other gas: Provide CGA no. | |

| No. of Cylinders | Inscribe |
|---|---|
| Must be an even number to have the same quantity of cylinders per side (2 cyl. each side = 4) | |

| Alarm Box | Inscribe |
|---|---|
| Manifold with alarm box | AB |
| Manifold without alarm box | Leave Blank |

| Options | Inscribe |
|---|---|
| Vent Valve | VV |
| Outside Installation | 3R |
| Ultra High Purity Cleaning | UHP |
| Cylinder Isolation Valve | CIV |

| Hoses & Pigtails | Inscribe |
|---|---|
| Teflon Core hose | TCH |
| Thermoplastic hose | NCH |
| All stainless steel hose | SSH |
| Rigid copper pigtail | RCP |
| Rigid stainless steel pigtail | SSP |

| Installation Hardware | Inscribe |
|---|---|
| Wall Mounted | WM |
| Floor Stand | FS |

| Header Style | Inscribe |
|---|---|
| Standard 10" Center | 10S |
| Standard 5" Center | 5S |
| Vertical crossover 5" center | 5V |
| Special (Please Provide Details) | SPX |

**<u>*electric trim heaters</u>**

Nitrous oxide and carbon dioxide manifolds, we strongly recommend the use of a electric gas (trim) heater.

## 1.4 Dimensions

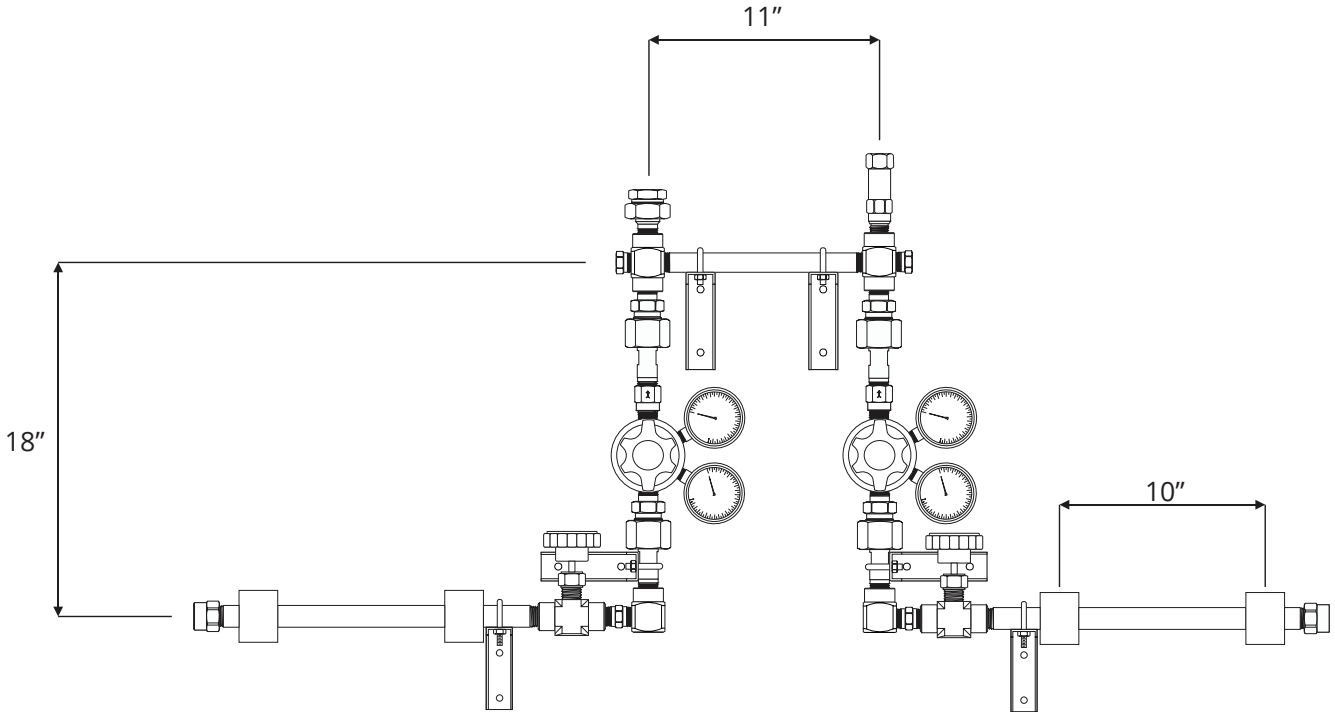


**Figure 1.3 - Typical Dimensions of an open-style manifold**

# 2.0 Installation

## 2.1 Header Bar Installation

Height - The header bar should be installed so that the middle of the mounting block is at 64” from the floor. A spirit level should be used to align the mounting panel horizontally.

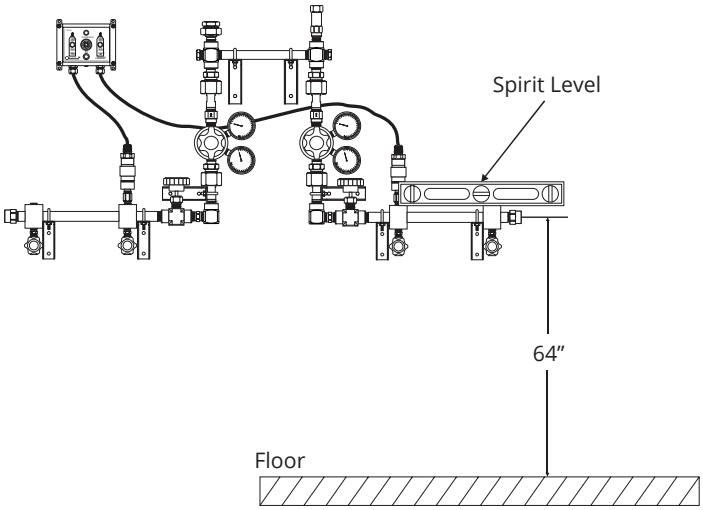


**Figure 2.1 – Installation Height**

## 2.2 Wall Bracket Installation

We supply one wall bracket per mounting block (i.e. per cylinder). The wall bracket locations are subject to change based upon the type of wall. The wall brackets can be installed anywhere if the wall is made of bricks, concrete and blocks or wood reinforced dry walls. For standard dry walls, we recommend to install the wall brackets where the studs are located. Each header block can support 5-10 lbs depending upon the type and length of the flexible hose attached to each block.

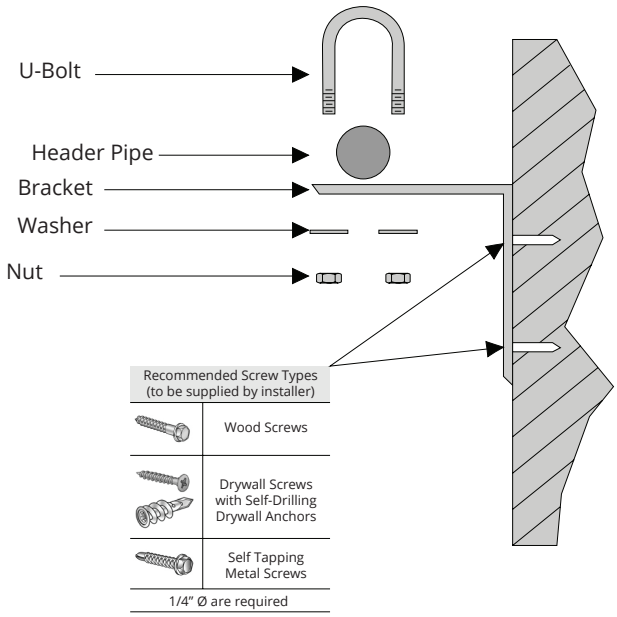


**Figure 2.2 – Wall Bracket Anchoring Details**

## 2.3 Header Bar, Regulator Assembly and Outlet Module Connection

The manifold is likely to be shipped in sections: two (2) header bars, two (2) regulator assemblies and the outlet module. Those sections are linked together by union assemblies (union nut, union adapter and union nipple). First, screw the union nuts by hand to their respective union adapters. Then, tighten each connection by using two wrenches (see Figure 2.4).

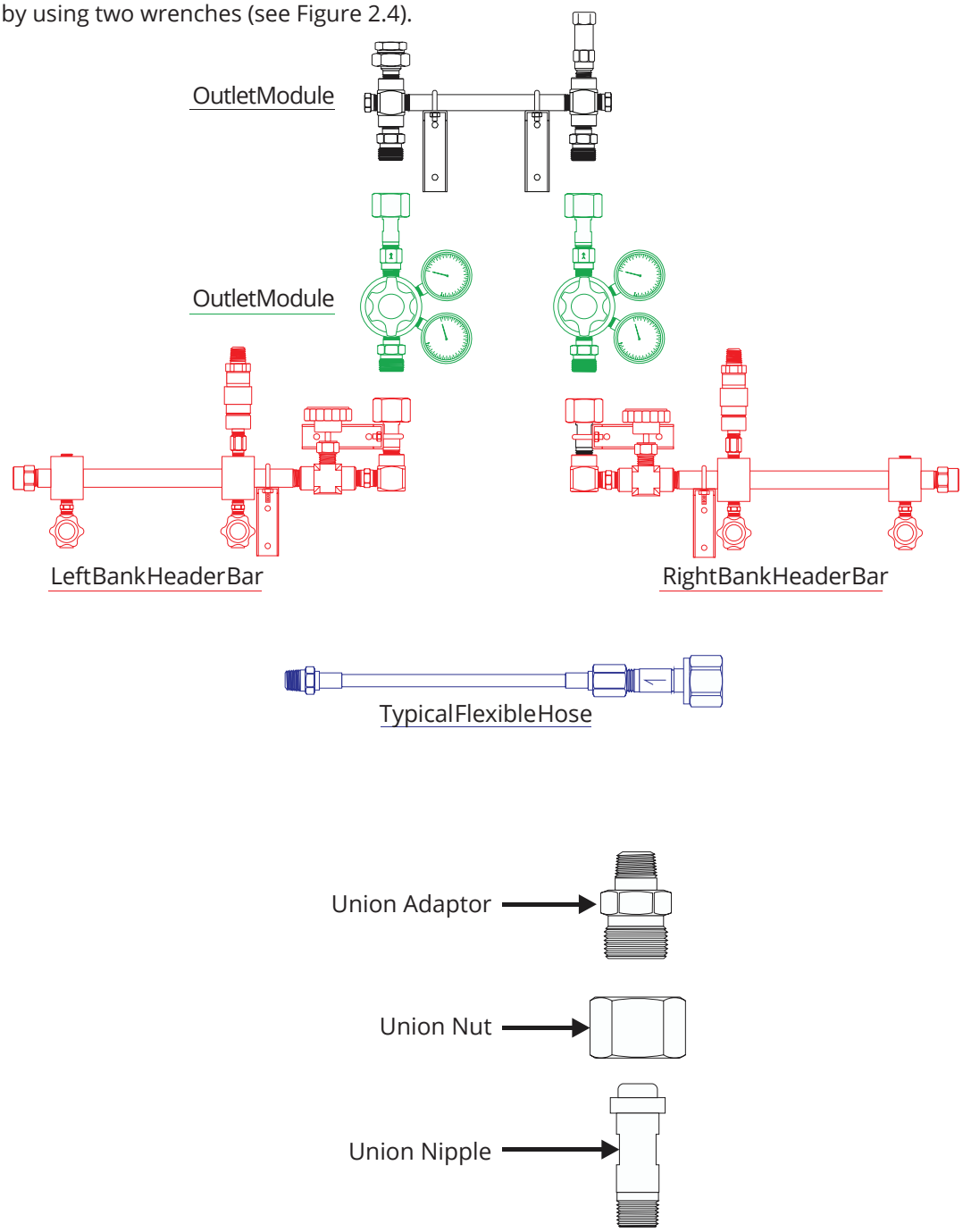


**Figure 2.3 – Open-Style Manifold Components**

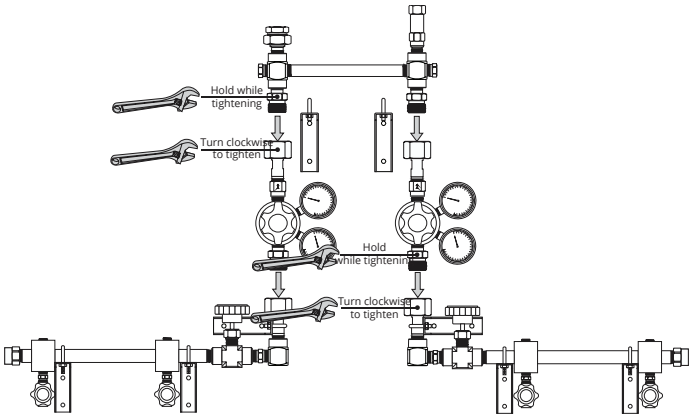


**Figure 2.4 – Tightening Union Assemblies**

## 2.4 Flexible Hose Installation

Unless otherwise specified, the header bars come complete with the hoses/pigtails factory-installed.

## 2.5 Gas Cylinder Installation

Each flexible hose inlet connection (aka CGA fitting) has been installed to correspond to a given gas service. Insert the CGA fitting to the gas cylinder valve threaded part (which could be female or male depending on the gas service). First tighten by hand the CGA fitting to the cylinder valve. Using an adjustable wrench, tighten thoroughly until fitting comes to a complete stop.

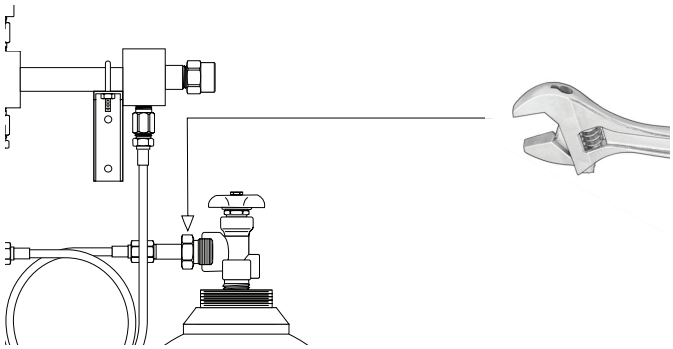

**Figure 2.5 – Gas Cylinder Installation**

**CAUTION**

Care should be exercised when bending flexible hoses to connect them to cylinders.
**Do not kink hose.**

## 2.6 Plumbing

**Gas Service Pipe**

In high purity piping installations, quality of tubing and fittings are of paramount importance. Therefore, the piping installer should be familiar with and experienced in such critical applications. Hereunder is a list of important points to consider.

Where possible:

- Privilege stainless steel tubing over copper and copper over soft tubing such as Teflon or nylon.
- Always verify material compatibility with the service gas.
- A good piping network is always protected against overpressure with a safety (pressure) relief valve (vented to a safe location).
- A valve (ball type or diaphragm type) should be installed near the regulator.
- Privilege welded or brazed joints over threaded or compression joints.

**Caution**

Remove all protective caps prior to assembly. The protective cap may ignite due to the heat of recompression in an oxygen system.

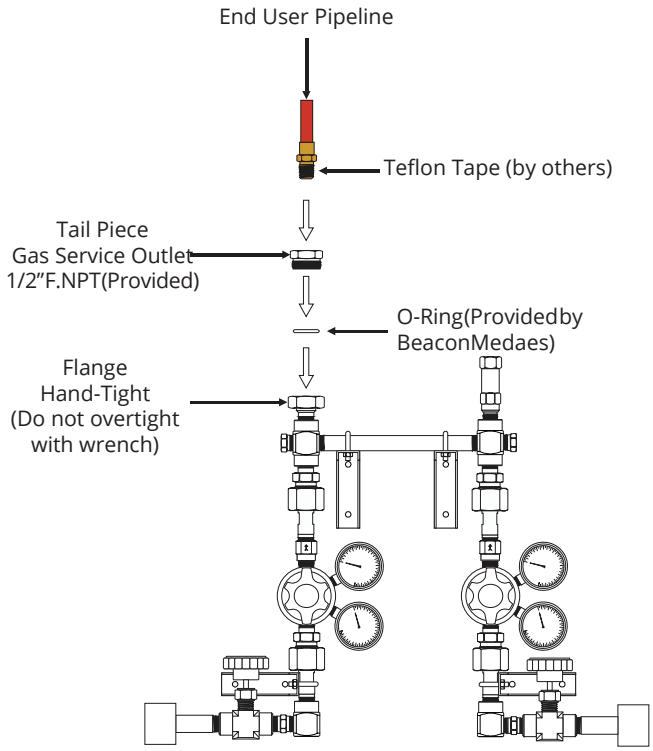


**Figure 2.6 – Plumbing**

**Note To Installer**

After your first pressure test, if the flange/tailpiece assembly is leaking, you may want to tighten 1/32 of a turn using pipe wrenches. If the assembly is still leaking, the O-ring is probably broken. Please replace the O-ring with the provided spare O-ring.

<u>Pressure Relief Valve</u>

There is one (1) pressure relief valve on the OSA Series manifolds. The relief valve is located on the right side and on top of the outlet module. The outlet connection of the pressure relief valve is ½" F.NPT. We strongly recommend to pipe this safety relief valve to a safe location. In order to ease the installation, it is preferable to install a union close to the safety relief valve outlet. The vent pipe can not be smaller than 1/2" NPS. The end of the vent pipe must be oriented so that debris and water cannot enter the vent pipe.

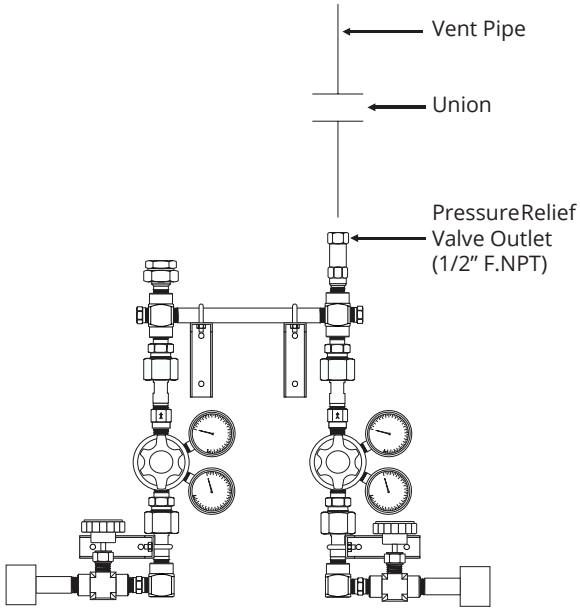


**Figure 2.7 – Pressure Relief Valve**

# 3.0 Operation

## 3.1 Principal Of Operation

The OSA Series manifolds use regulator pressure differential to determine which bank is the main supply source and which bank is in standby. The pressure reducing regulator having the highest delivery set point is the main supply source. When the gas cylinder pressure of the main supply source drops below the stand-by (full) supply side, the gas begins flowing from the stand-by side. At this point, it is important for the operator to adjust the delivery pressures of each pressure reducing regulators. As example, say the left side is the main supply bank and the delivery pressure is set at 100 psi and the right side (the stand-by bank) pressure regulator is set at 75 psi. The operator should reverse the pressure settings so that the right bank is adjusted at 100 psi and the left bank is adjusted at 75 psi. The right bank is now the main supply source and the left banks is the stand-by bank.

Optional Alarm Box

The alarm box is equipped with two (2) green light (one per bank), one red light for both banks, a buzzer and a silence button. The green lights indicate that the pressure of the corresponding cylinder bank is high enough to continue to operate the equipment. The red light indicates a depleted cylinder bank and the need to replace the empty cylinder bank with full cylinders. Each time a red light is turned on, the buzzer is also energized. The silence button kills the buzzer but does not turn off the red light.

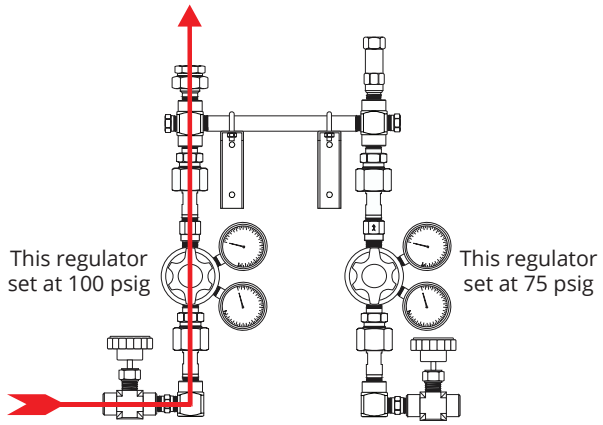


Supply From Left Bank
The operator has to manually set the left bank regulator 25 psig higher than the right bank regulator

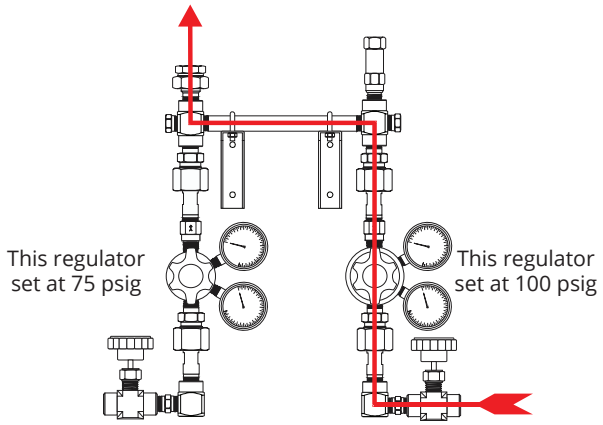


Supply From Right Bank
The operator has to manually set the right bank regulator 25 psig higher than the left bank regulator

**Figure 3.1 - Open-Style Manifold Operation**

## 3.2 Alarm Box Operation and Installation

When the OSA Series manifolds are ordered with the alarm box option, the alarm box operation and instruction manual is delivered separately from the present instruction manual.

## 3.3 Line Pressure Adjustment

The delivery pressure of each regulator is field adjustable. Turn the pressure reducing regulator adjustment knob clockwise to increase the pressure. This pipeline regulator is a non relieving type. That means it needs flow to decrease the pressure. Therefore, to decrease the pressure, turn the line regulator knob counterclockwise while you create flow.

**CAUTION**

Flexible hoses containing check valves can be pressurized with system pressure only up to the check valve seat. The threaded joints on the flexible hose, including the CGA connection, will not be pressurized with the process gas.

## 3.3 Leak Testing and Purging

1. Connect the cylinders to the flexible hoses with the CGA nut/nipple end connections provided.

2. Use the process gas to leak test and purge the system. If the process gas is hazardous (flammable, toxic and/or corrosive) or sensitive to atmospheric contaminants, use clean dry nitrogen as a purge gas to leak test and purge the manifold system.

3. Isolate the downstream side of each regulator assemblies by closing both header isolation valves.

4. Slowly open the gas cylinder valves from the left side of the manifold. Open the isolation valve located on the left side header and check the inlet pressure gauge rising up to full cylinder pressure. Repeat the same procedure for the right side of the manifold.

5. Make sure the source valve (sold separately) is closed. Increase the pressure of the left side regulator by turning the pressure adjusting knob clockwise until the desired pressure is indicated on the outlet gauge.

6. With cylinders connected, but with the cylinder valves closed, leak test all connections with either a soap solution or a gas leak detector such as Snoop®.

7. Close the left side regulator by turning the pressure reducing regulator knob counterclockwise. Open the source valve to relieve the pressure. Close the source valve when the pressure gauge of the left bank regulator indicates zero.

8. Increase the pressure of the right side regulator by turning the pressure adjusting knob clockwise until the desired pressure is indicated on the outlet gauge.

9. With cylinders connected, but with the cylinder valves closed, leak test all connections with either a soap solution or a gas leak detector such as Snoop®.

10. The manifold is now ready to operate. Vent the system to atmospheric pressure if the manifold is to be put into service at a later date.

## 3.4 Pressure Switch Field Calibration

Tools Needed

- Flathead screwdriver with 3/16” or 1/4” wide blade

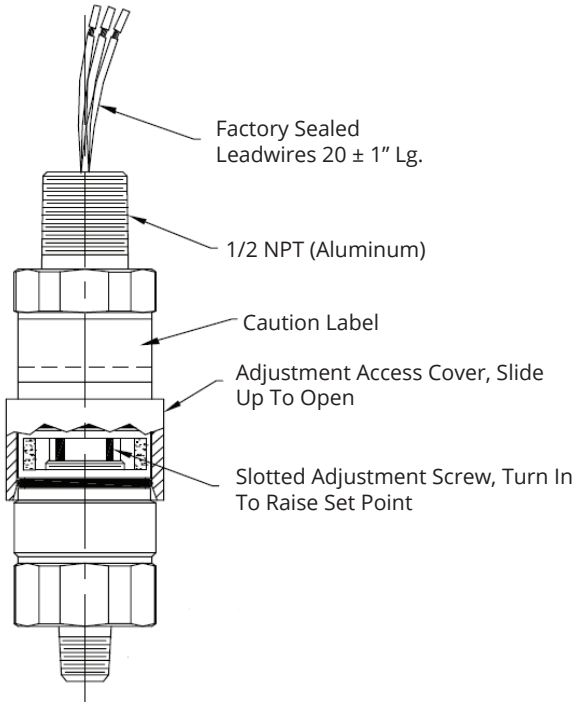


**Figure 3.2 - Pressure Switch Adjustment**

**NOTE**

The Hi-Low Pressure Switch Assemblies do not come factory calibrated as a standard feature. The installer or the end user is responsible for adjusting the setting of both pressure switches in the field.

1. Connect control to pressure source.
2. With power disconnected, slide cover toward electrical terminations while twisting it to overcome friction.
3. Connect power to terminals or leads.
4. Insert screwdriver into adjustment slot and turn left (clockwise) to increase setting or right (counterclock-wise) to decrease setting (Figure 3.2).

For setting on RISE, apply desired pressure and turn adjustment left (clockwise) until switch actuates (circuit across N.O. and COM terminals closes).

For setting on FALL, apply pressure equal to normal system operating pressure. Reduce source pressure to setpoint value. Turn adjustment right (counter clockwise) until switch actuates (circuit across N.C. and COM terminals closes).

## 3.6 Start Up and Switchover Verification

*This start up procedure assumes that the minimum delivery pressure of the pipeline is 75 psig. As mentioned before, the switchover process is based on the pressure difference between the "in service" regulator and the "stand-by" regulator. This pressure differential has to be around 25 psig. Therefore, the pressure of the "stand-by" bank regulator is set at 75 psig and the "in service" bank pressure regulator is set at 100 psig. The same logic applies for different delivery pressures as long as the pressure differential is around 25 psig. In the following example, we start the verification process with the primary bank (the "in service" bank) being the left side. Finally, this example considers there is an alarm box installed to the manifold.*

1. Open the right bank header isolation valve (turn counter-clockwise to open). S-L-O-W-L-Y OPEN ONE CYLINDER VALVE ON THE RIGHT BANK. The right bank pressure gauge should show the full pressure of the right cylinder bank. If your unit is equipped with an alarm box, the right bank green "Normal Pressure" light will turn on. At that point, because the left bank is still unpressurized, the red light should still be illuminated.

2. S-L-O-W-L-Y open the left header isolation valve fully. S-L-O-W-L-Y open one cylinder valve on the left cylinder bank. The left bank pressure gauge will show the full pressure of the left cylinder bank. The left bank green "Normal Pressure" light will turn on. both banks are now pressurized and the red light should turn off.

3. Make sure the source valve (pipeline valve) is closed.

4. Increase the delivery pressure up to 75 psig with the right side (stand-by bank) pressure reducing regulator.

5. Increase the delivery pressure up to 100 psig with the left side (main supply side) pressure reducing regulator.

6. Create a slight flow of gas in the delivery pipeline system. Close the left cylinder valve to simulate a depleting left bank. Observe the following:

   The left bank gauge pressure slowly falls and the control automatically switches over to the right bank once the left bank inlet pressure gauge reaches 75 psig.

   - Delivery pressure is now 75 psig
   - Green "Normal Pressure" light is turned off on the left bank.
   - Red "Low Pressure" light turns on.
   - Buzzer turns on.
   - Any remote alarms should be activated at this time.
   - The right bank is in service.

7. S-L-O-W-L-Y re-open the left cylinder valve. Observe the following:

   - Left bank pressure gauge returns to full pressure.
   - Green "Normal Pressure" light turns on.
   - Red "Low Pressure" light turns off.
   - Buzzer shuts off.
   - Any remote alarms should be cancelled.
   - The delivery pressure is bank to 100 psig (approx.)
   - The left bank is in service.

8. Close the header isolation valve on the left bank. And wait for the delivery pressure to reach 75 psi.

9. Adjust the delivery pressure of the left bank to about 75 psi.

10. Increase the delivery pressure of the right bank pressure reducing regulator up to 100 psig.

11. Open the left bank header isolation valve.

12. Create a slight flow of gas in the delivery pipeline system. Close the right cylinder valve to simulate a depleting right bank. Observe the following:

    The right bank gauge pressure slowly falls and the control automatically switches over to the left bank once the right bank inlet pressure gauge reaches 75 psig.

    - Delivery pressure is now 75 psig
    - Green "Normal Pressure" light is turned off on the right bank.
    - Red "Low Pressure" light turns on.
    - Buzzer turns on.
    - Any remote alarms should be activated at this time.
    - The left bank is in service.

13. S-L-O-W-L-Y reopen the right cylinder valve. Observe the following:

- Right bank pressure gauge returns to full pressure.
- Green “Normal Pressure” light turns on.
- Red “Low Pressure” light turns off.
- Buzzer shuts off.
- Any remote alarms should be cancelled.
- The delivery pressure is bank to 100 psig (approx.).
- The right bank is in service.

The switchover process has been verified and the manifold is ready to operate. All gas cylinder valves must be open on both banks. You can leave the manifold with the right bank as the primary supply source or re-adjust the pressure reducing regulators to put the left bank regulator as the primary source and the right bank as the stand-by bank.

## 3.8 Cylinder Replacement

1. Shut off all cylinder valves and the header valve on the depleted cylinder bank.

2. S-L-O-W-L-Y loosen and remove the flexible hose connections from the depleted cylinders.

3. Put protective cylinder caps to all cylinders.

4. Remove the depleted cylinders from the manifold area.

5. Place and secure the full cylinders into position using chains, belts, or cylinder stands.

6. Remove the protective cylinder caps from the full replacement cylinders. If the gas is not toxic or non flammable, with the valve outlet pointed away from you or anyone else, slowly open each cylinder valve slightly to blow out any dirt or contaminants which may have become lodged in the cylinder valve.

7. Connect the flexible hoses to the cylinder valves and tighten with a wrench. Do not overtighten.

8. Open the header valve. S-L-O-W-L-Y open each cylinder valve until fully open.

9. Observe the following conditions:

- The red ”Low Pressure” light turns off, and the green “Normal Pressure” light turns on.

10. The manifold supply bank is now replenished. Re-adjust the pressure reducing regulators by following the instructions in Section 19.

## 3.9 Maintenance

**CAUTION**

Do not use leak test solution that contains ammonia. Solutions containing ammonia may cause brass tubing to crack.

**1. Main control section**

a. On a daily basis, maintain a record of the line pressure.

b. On a monthly basis:

1. Check regulators and valves for external leakage.
2. Check valves for closure ability.

c. On an annual basis:

1. Check relief valve pressures.
2. Check regulator seats.

**2. Manifold header**

a. On a daily basis, look for cylinder frosting and surface condensation. Should excessive condensation or frosting occur it may be necessary to increase the vaporizing capacity.

b. On a monthly basis:

1. Inspect valves for proper closure.
2. Check cylinder flexible hoses for cleanliness, flexibility, wear, leakage, and thread damage. Replace damaged flexible hoses immediately.
3. Inspect flexible hoses check valves for closure ability.

c. Every 4 years

1. Replace all flexible hoses

# 4.0 Troubleshooting

## 4.1 Troubleshooting

| Symptom | Probable Cause | Remedy Or Check |
|---|---|---|
| **Loss Of Cylinder Contents** | | |
| Audible or inaudible gas leakage (Unknown Origin) | Leakage at manifold piping connection | Tighten, reseal or replace |
| | Leakage in downstream piping system | Repair as necessary |
| | Leakage at cylinder valve | Replace cylinder |
| | Gauge leaks | Reseal or replace |
| | Regulator leaks | Repair or replace |
| Venting at relief valves | Line regulator setting too high | Set delivery pressure to specifications |
| | Overpressure due to creeping or faulty regulation by any regulator | Replace regulator seat and nozzle components |
| | Regulator freeze-up (nitrous oxide or carbon dioxide) | Reduce the flow demand or increase the number of supply cylinders. Tighten bonnet. |
| Gas leakage around regulator body or bonnet | Loose bonnet | Tighten bonnet |
| | Diaphragm leak on regulator | Replace regulator |
| Gas leakage around valve stem on master valve | Bonnet is leaking | Tighten nut |
| | Faulty valve | Repair or replace valve |

| Symptom | Probable Cause | Remedy Or Check |
|---|---|---|
| **Loss Of Reserve Bank Contents** | | |
| Both banks feeding | Reserve (stand-by) regulator seat leaks | Replace regulator |
| | Reserve (stand-by) regulator set to open at too high a pressure | Adjust intermediate regulator per specifications |
| Opposite bank feeding | Flow demand too high | Reduce flow demand |
| | Faulty primary regulator and/or fixed-pressure regulator | Replace regulator |
| Premature switchover to reserve bank | Flow demand too high | Reduce flow demand |
| | Leaks in the manifold system | Leak test, tighten, reseal or replace fittings as necessary |
| No switchover | Both regulators are set at the same pressure | Adjust regulators per specifications |
| | Closed cylinder or shutoff valves | Open Valves |
| | Stand-by regulator defective<br>Empty reserve bank cylinder | Replace or repair regulator<br>Replace cylinder |

## 4.2 Shutdown

**WARNING**

Hazardous gases must be discharged into a safety vent. Be sure to use a venting procedure that is environmentally acceptable and complies with Federal, State, Provincial and local requirements.

1. Close all cylinder valves.
2. Vent the system pressure to 0 psig. If a hazardous gas is used, purge the entire system with clean, dry nitrogen gas. Continue purging until the hazardous gas level in the system is below the TLV for the gas.
3. Close all system valves.
4. Close the line regulator by turning the knob counterclockwise until it reaches the stop.

## 4.3 Repairs

If the manifold leaks or malfunctions, take it out of service immediately. Repairs should be made only by BeaconMedæs with the special tools, test equipment and trained personnel required to make a safe repair. Tampering with the switchover manifold voids the warranty. Please contact BeaconMedæs to arrange for any necessary repairs.

Repairs to switchover manifolds done after the initial warranty period has expired are chargeable to the customer. Upon receipt at the factory, the switchover manifolds will be inspected and you will be contacted with a repair cost estimate. No item will be repaired until approval is received. There will be an evaluation charge assessed for equipment not repaired. All repairs should be arranged through your BeaconMedæs supplier.

**NOTE: All equipment being returned must be purged of all hazardous materials using a clean, dry inert gas (e.g. Dry Nitrogen) prior to return.**

BeaconMedaes®

1800 Overview Drive  Rock Hill, SC 29730
(888) 4-MEDGAS  (888) 463-3427
Fax (803) 817-5750
www.beaconmedaes.com