Installation, Operation and Maintenance Instructions

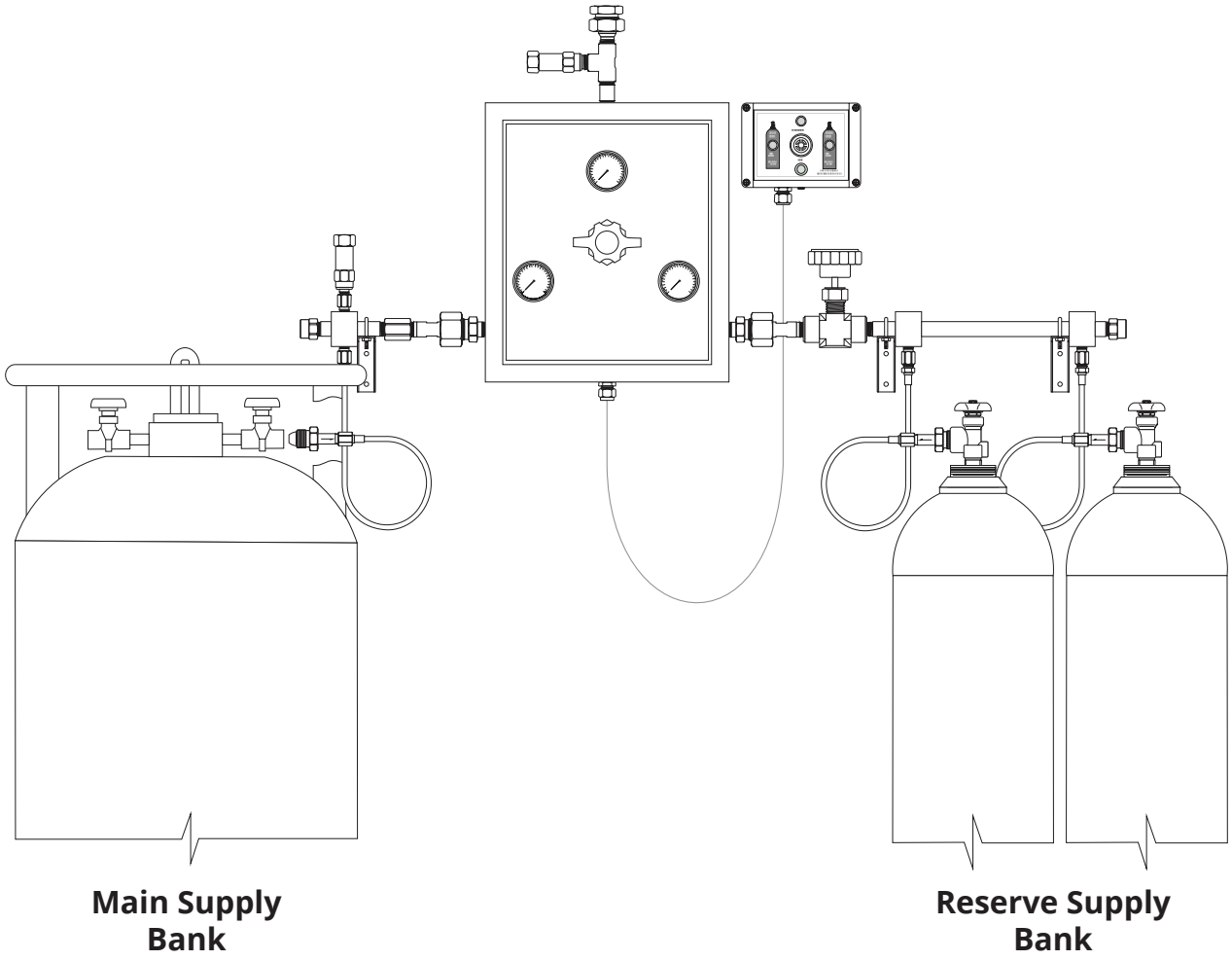

Automatic Switchover Back-Up Manifolds for High Purity Applications (Cabinet Style)

Part number 2205 6105 05

Revision 01

June 16, 2016

BeaconMedæs®

Installation, Operation and Maintenance Manual

Fully Automatic Switchover Manifolds for High Purity Applications (Cabinet Style, High Pressure)

This unit is purchased from: _____

Date purchased: _____

Model number: _____

Serial number: _____

Option(s) included: _____

Any information, service or spare parts requests should include the machine serial number and be directed to:

BeaconMedæs
1800 Overview Drive
Rock Hill, SC 29730

Telephone: (888) 463-3427
Fax: (803) 817-5750

Part number 2205 6105 05
Revision 01
June 16, 2016

Table of Contents

1.0 General Information

1.1 Component Description
1.2 Ordering Information
1.3 Specifications
1.4 Standard Factory Pressure Settings
1.5 Dimensions

2.0 Installation

2.1 Mechanical Installation
2.1.1 Manifold Box Installation
2.1.2 Optional Alarm Box Installation
2.1.3 Header Bars Installation
2.1.4 Relief Valve Installation
2.1.5 Supply Pipeline

3.0 Operation

3.1 Theory of Operation
3.2 Leak Testing and Purging
3.3 Start Up and Checking Procedures
3.4 Cylinder Replacement
3.5 Line Pressure Adjustment
3.6 General Maintenance
3.7 Shutdown

4.0 Troubleshooting

4.1 Troubleshooting
4.2 Repairs

Safety Precautions

Protect yourself and others. Read and understand the following instructions before attempting to use this equipment. Failure to understand and follow these instructions could result in serious personal injury and/or damage to equipment. Because of the many potential hazards associated with gases, read the Material Safety Data Sheet for each gas you will be using.

- Know and understand the physical and chemical properties of the gas being detected.
- Observe general precautions for the use of gases.
- Observe safety precautions for the gas being used.
- Read and follow precautions on cylinder labels.
- Never use these manifolds with gases not compatible with the materials of construction. The use of gases not compatible with the materials of construction may cause damage to equipment or injury to personnel.
- If flammable gases are used with this equipment do not locate it near open flames or any other source of ignition.
- If toxic or flammable gases are used with this equipment, emergency equipment applicable to the gases in use should be available in the operating area.
- Many gases can cause asphyxiation by displacing oxygen in the atmosphere. Make certain the area where these manifolds are operated is well ventilated. Provide a device to warn personnel of oxygen depletion in the work area.
- Do not release toxic or flammable gases in the vicinity of personnel. Use this equipment only in well ventilated areas. Vent gases to the outside atmosphere, and in an area away from personnel. Be sure that venting and disposal methods are in accordance with Federal, State, Provincial and local requirements. Locate and construct vent lines to prevent condensation or gas accumulation. Be sure the vent outlet cannot be obstructed by rain, snow, ice, insects, birds, etc. Do not inter-connect vent lines; if more than one vent is needed, use separate lines.
- Relief devices should be installed and properly vented in all gas handling systems to protect against equipment failure and overpressurization.
- Never connect this equipment to a supply source having a pressure greater than the maximum rated pressure. Refer to the Product Specifications for maximum inlet pressures.
- Never permit oil, grease, or other combustible materials to come in contact with cylinders, manifolds, and connections. Oil and grease may react and ignite when in contact with some gases – particularly oxygen and nitrous oxide.
- Cylinder, header, and master valves should always be opened very s-l-o-w-l-y. Heat of recompression may ignite combustible materials.
- Flexible hoses should never be kinked, twisted, or bent into a radius smaller than 3 inches. Mistreatment may cause the flexible hoses to burst.
- Do not apply heat. Some materials may react and ignite while in contact with some gases – particularly oxygen and nitrous oxide.
- Cylinders should always be secured with racks, chains, or straps. Unrestrained cylinders may fall over and damage or break off the cylinder valve which may propel the cylinder with great force.
- Oxygen manifolds and cylinders should be grounded. Static discharges and lightning may ignite materials in an oxygen atmosphere, creating a fire or explosive force.
- Welding should not be performed near nitrous oxide piping. Excessive heat may cause the gas to dissociate, creating an explosive force.
- Do not use leak test solution that contains ammonia. Solutions containing ammonia may cause brass tubing to crack.
- Always use oxygen compatible leak test solution on oxygen or nitrous oxide service equipment.

Abbreviations

C	Common	**OSHA**	Occupational Safety & Health Administration
CGA	Compressed Gas Association	**PSIG**	Pounds per Square Inch Gauge
FT-LBS	Foot-Pounds	**SCFH**	Standard Cubic Feet per Hour
IN-LBS	Inch-Pounds	**VAC**	Voltage, Alternating Current
N/C	Normally Closed	**VDC**	Voltage, Direct Current
N/O	Normally Open	**PCB**	Printed Circuit Board
NPT	National Pipe Taper		

Introduction

BeaconMedæs manifold systems are cleaned, tested and prepared for the indicated gas service and are built following National Fire Protection Association and Compressed Gas Association guidelines. The manifold consists of a manifold box, a control module and two supply bank headers, to provide an uninterrupted supply of gas for the specific gas application. This system is designed and built with features providing automatic switchover from the depleted "Service" supply bank to the "Reserve" supply bank. Pressure switches, alarm signal connections and lights show system status and alert the need to replace depleted cylinders. Features of the automatic system include adjustable line regulators, and rigid wall-mounted headers.

Disclaimer

BeaconMedæs shall not be liable for errors contained herein or incidental or consequential damages in connection with providing this manual or the use of material in this manual.

Warning

Our equipment is primarily intended for use in compressed gas systems. BeaconMedæs products are designed for use by persons technically trained in the proper use and safe handling of gas delivery systems. Due to the high pressure and hazardous gases employed in these processes, misapplication could result in injury or death. BeaconMedæs expressly warns against the sale to, or use of our products by, anyone other than professionally trained personnel. Do not use this equipment where pressures and temperatures can exceed those listed under the Section 1.3.

Through misuse, age, or malfunction, components used with inert, combustible, corrosive, toxic, or oxidizing gases can fail in various modes. The system designer is warned to consider the failure modes of all component parts used with the above mentioned gases and to provide adequate safeguards to prevent personal injury or damage to equipment in the event of such failure modes. Adequate safeguards can be, but are not limited to:

- Pressure relief devices adequately piped to a safe location;
- Gas detection devices connected to a proper warning audible and visual alarm;
- Automatic shutoff valves and/or manual shutoff valves with an emergency stop push button;
- Self-contained breathing apparatus;
- Pipeline purge system with inert gas;
- Fire extinguishers and/or automatic sprinklers.

System designers must provide a warning to end users in the systems instructional manual if protection against a failure mode cannot be adequately provided for.

It should be recognized that warnings are valid for any equipment, regardless of manufacturer, and are not restricted to equipment manufactured by BeaconMedæs. BeaconMedæs's reputation for equipment quality performance is well established. We feel we have the additional obligation to provide information or warnings to customers to assist them in applying our equipment in a reasonable and safe manner.

Manufacturer Statement

The information contained in this instruction manual has been compiled by BeaconMedæs, from what it believes are authoritative sources, and is offered solely as a convenience to its customers. While BeaconMedæs believes that this information is accurate and factual as of the date printed, the information, including design specifications, is subject to change without prior notice.

Design Changes

In line with our commitment to continuous improvement, BeaconMedæs reserves the right to make design modifications or discontinue manufacture of any equipment without prior notice.

Trademarks Used in this Manual

Buna-N, Delrin, Kalrez, Teflon, Tefzel, Vespel, Viton and Viton-A are trademarks of E.I. DuPont de Nemours & Company Monel is a trademark of Inco Alloys International, Inc. Kynar is a trademark of Atochem North America, Inc. Snoop is a trademark of Nupro Company Swagelok is a trademark of Crawford Fitting Company Hastelloy is a trademark of Union Carbide Corporation VCR is a trademark of Cajon Company

1.0 General Information

1.1 Component Description

Verify that all components below have been received. If any of these items are missing or damaged, please notify your supplier immediately.

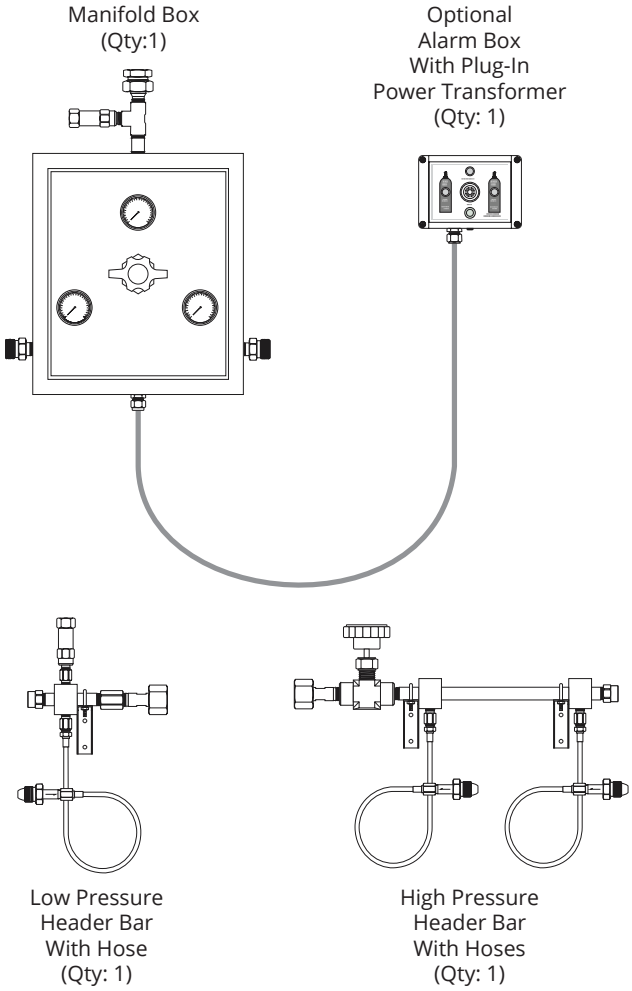

The header bar wall brackets are supplied with each manifold.
Unless otherwise specified, we supply one bracket per header bar block.

Figure 1.1 - PBUM3500 Component Description

The PBUM3500 Series is designed for use with one (1) low pressure cylinder bank as the main supply of gas and one (1) high-pressure bank as the back-up (reserve) of gas. It provides an uninterrupted supply of gas even when the primary bank of cylinders is depleted. At a preset pressure, the switchover unit automatically switches to its reserve bank. When the low pressure bank is replenished, the manifold switches back (draws gas) to this low pressure bank again. In other words, the low pressure bank (normally liquid cylinders – gas withdraw) is the main supply side as long as there is enough pressure in the tank. Otherwise, gas will flow from the reserve/back up high pressure bank.

Optional Alarm Box - Internal pressure switches, a low bank pressure light and a buzzer indicate low bank pressure and the need to replace depleted cylinders.

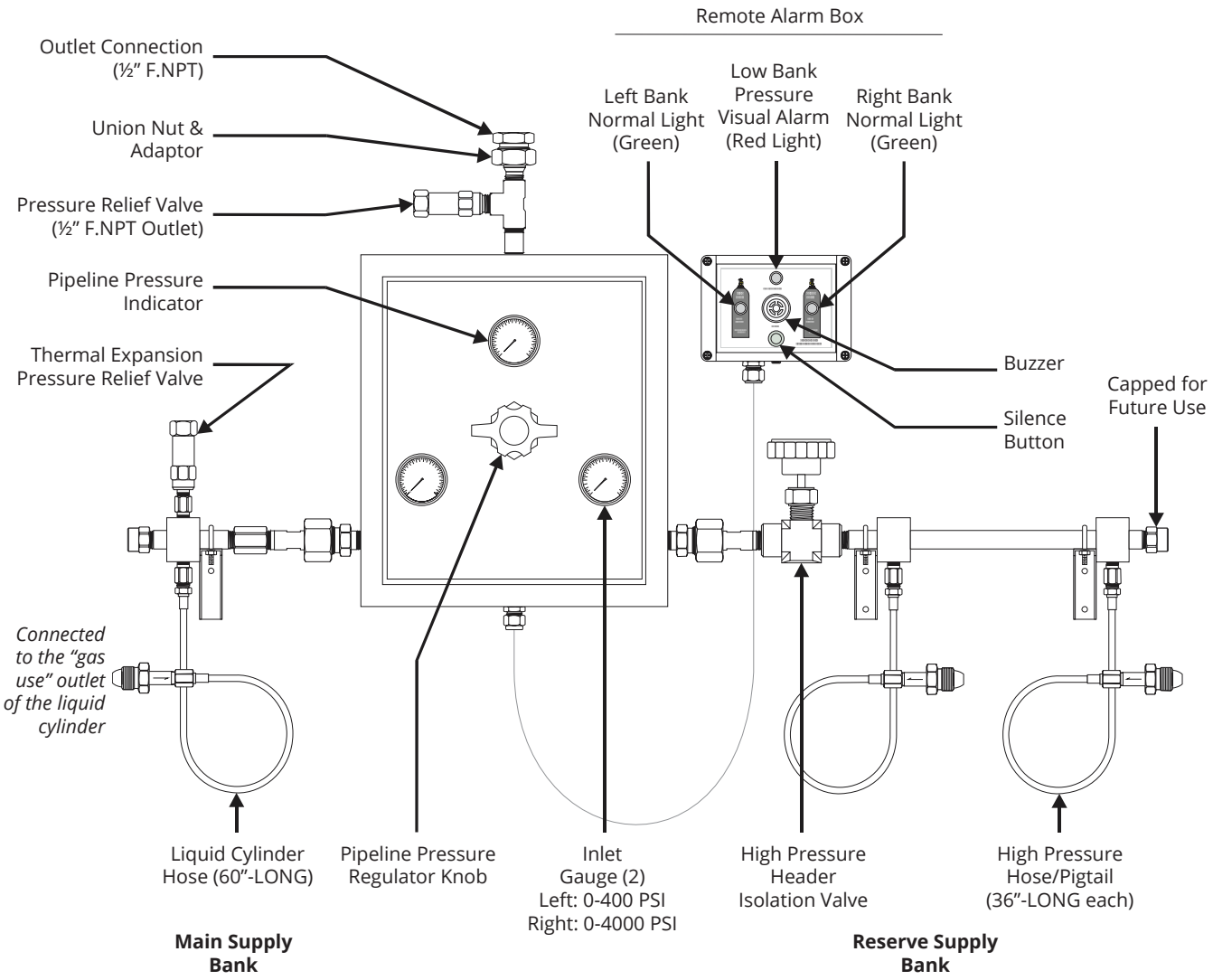

Figure 1.2 - PBUM3500 Manifold Description

1.2 Ordering Information

PDUM3500 – [ ] – [ ] – [ ] – [ ] – [ ] – [ ] – [ ]

Gas	Inscribe
Argon	CGA 580
Carbon Dioxide	CGA 320
Nitrogen	CGA 350
Nitrous Oxide	CGA 328
Oxygen	CGA 540

Main Bank-No. of Cyl.	Inscribe
No. of Liquid Cylinders	

Reserve Bank-No. of Cyl.	Inscribe
No. of High Pressure Cyl.	

Options	Inscribe
Outside Installation	3R

Installation Hardware	Inscribe
Wall mount bracket	WM
Floor stand	FS

Header Style	Inscribe
Standard 10" center	10S
Staggered 5" center	5S
Vertical crossover 5" ctr	5V

Hoses & Pigtails *(Res. Bank)**	Inscribe
Teflon core hose	TCH
Thermoplastic hose	NCH
All stainless steel hose	SSH
Rigid copper pigtail	RCP
Rigid stainless steel pigtail	SSP

* Liquid cylinder hoses come standard in stainless steel

1.3 Specifications

Gas	Refer to Part Matrix Number
Maximum Inlet Pressure (Reserve Bank)	3000 psig
Maximum Inlet Pressure (Main Bank)	350 psig
Flow	Cv = 0.4
Operating Temperature	32°F to 120°F
Pressure Gauge Size	2-1/2" Dial
Inlet Connection	Gas Specific CGA Connections
Outlet Connection	½" F.NPT
Pressure Relief Valve Outlet Connection	½" F.NPT
Audible and Visual Alarm	Optional
Header	½" Nominal Pipe Size
Power Requirement	Optional Alarm Box: 1 Amp. Heaters (Each – Quantity = 2): 110 VAC, 200 watts, 50-60 Hz
Alarm Signal	Dry Contact, Normally Open, 30 Amp, MTBA: 5 million operations
Filter	10 micron (in both inlet regulators)
Power Transformer	Primary: 110 VAC – Secondary: 24 VAC – Single Phase – 1 Amp.
Delivery Pressure Range	5-125 psig (other delivery pressure ranges available)

Name Tag

Each piece of equipment bears a name tag telling you important information about:

- Gas service
- Alarm set points
- Pressure settings
- Year of manufacture
- Model number

Flexible Hoses

Flexible hose/rigid pigtails selection is critical to get the best performance from your manifold.

We offer five types of hoses:

- Thermoplastic Hoses
- Teflon Core Hoses
- Stainless Steel Hoses
- Copper Rigid Pigtails
- Stainless Steel Rigid Pigtails

For additional safety, stainless steel hoses are available with:

- Armor guard

As a standard feature, each hose has:

- A check valve in the CGA nipple

Finally, we offer three cylinder hose connections (all CGA / gas related):

- Standard CGA nut & nipple
- Quick connects (zip nuts)
- Hand tight nuts

Oxygen Service Equipment

All oxygen and nitrous oxide service equipment made by BeaconMedæs is cleaned as per the requirements of CGA G-4.1-1996. The flexible hoses installed on oxygen service discharging stations are Teflon core, stainless steel over braid with brass end connections. Also available for oxygen service are copper rigid pigtails with brass end fittings.

CAUTION

Remove all protective caps prior to assembly. The protective cap may ignite due to heat of recompression in an oxygen system.

1.4 Standard Factory Pressure Settings

Inlet Pressure Gauge - Reserve Bank	0-4000 psig (Standard)
Inlet Pressure Gauge – Main Bank	0-400 psig (Standard)
Outlet Pressure Gauge	0-200 psig (Standard)
Outlet Pressure Range	5-125 psig
Switchover Pressure (from Main to Reserve)	135 psig (Approx.)
Alarm Set Point - Reserve Bank	235 psig on fall (Approx.)
Alarm Set Point - Main Bank	145 psig on fall (Approx.)
Pressure Relief Valve (Outlet)	150 psig

The above mentioned settings will vary depending upon which PBUM Series Automatic Switchover manifold is purchased. The specific settings of each piece of purchased equipment are indicated on their respective name tags.

1.5 Dimensions

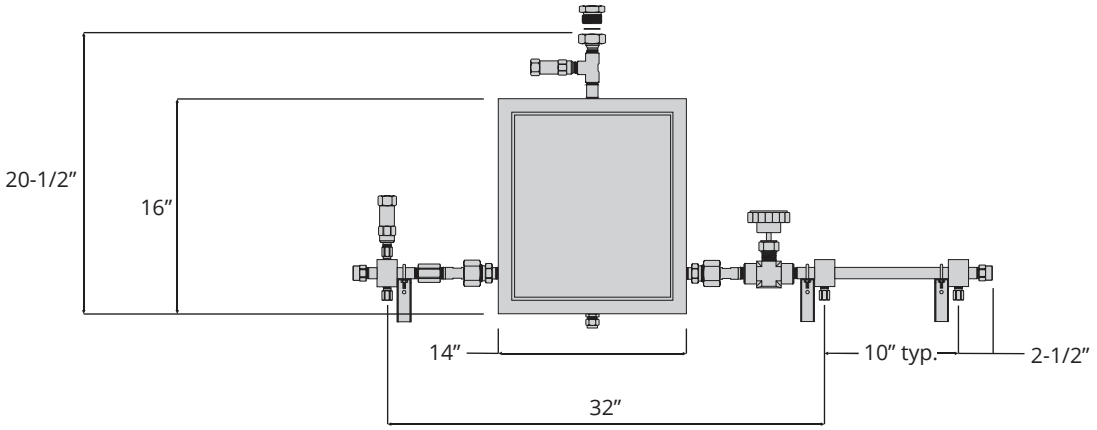

Figure 1.3 - PBUM3500 Dimensions

2.0 Installation

Manifolds should be installed in accordance with guidelines stated by the National Fire Protection Association, the Compressed Gas Association, OSHA, and all applicable local codes. Carbon dioxide and nitrous oxide manifolds must not be placed in a location where the temperature will exceed 120°F (49°C) or fall below 32°F (0°C). The manifolds for all other gases should not be placed in a location where the temperature will exceed 120°F (49°C) or fall below 32°F (0°C). A manifold placed in an open location should be protected against weather conditions. During winter, protect the manifold from ice and snow. In summer, shade the manifold and cylinders from continuous exposure to direct rays of the sun. The manifold should be located in a clean, well ventilated area which is free of oil and combustible materials.

Leave all protective covers in place until their removal is required for installation. This precaution will keep moisture and debris from the piping interior, avoiding operational problems.

If the manifold happens to be installed indoors, all safety relief valves should be piped/vented to a safe location.

2.1 Mechanical Installation

Recommended Height – The manifold box height should be such to have the header bars at 64” from the finished floor (see Figure 2.1).

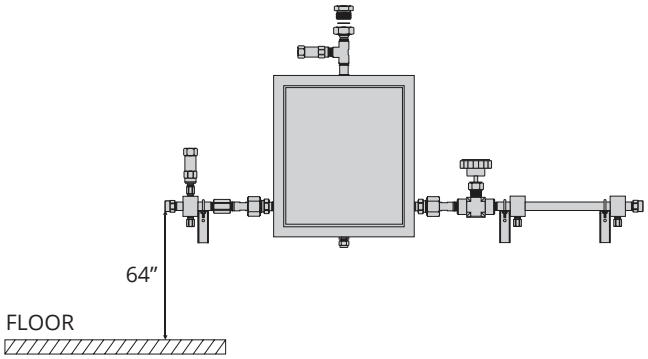

Figure 2.1 – Mechanical Installation

2.1.1 Manifold Box Installation

The manifold box must be secured to a solid wall. First, the manifold frame/bracket must be solidly installed to the wall. The installer is responsible to select the proper hardware for this installation. Please note that the manifold box weighs about 45 lbs. Once the wall bracket is installed to the wall, the manifold box can be mounted to the wall bracket (see Figure 2.2). You might be required to tighten the bolts and nut at the back of the manifold box.

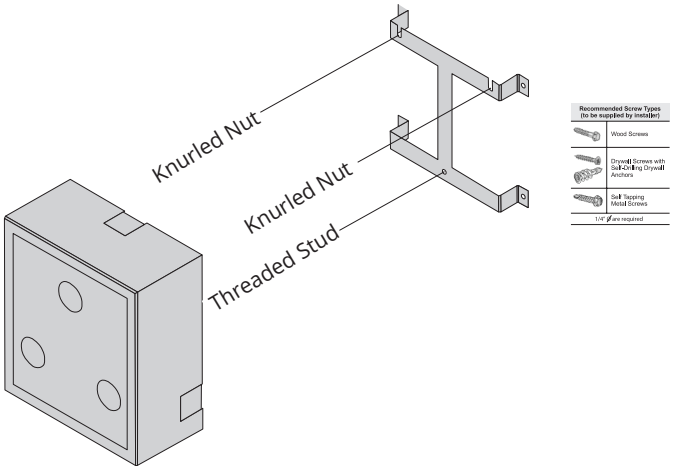

Figure 2.2 – Manifold Box Installation

2.1.2 Optional Alarm Box Installation

The alarm box and the manifold box are factory connected together. The cable between the two boxes is about 4 feet long. The alarm box can be installed on either side or under the manifold box.

2.1.3 Header Bars Installation

The header bars must be installed on each side of the manifold inlets (one header bar per side).

- Wall Brackets – We supply one wall bracket per mounting block (i.e. per cylinder). The wall bracket locations are subject to change based upon the type of wall. The wall brackets can be installed anywhere if the wall is made of bricks, concrete and blocks or wood reinforced dry walls. For standard dry wall, we recommend to install the wall brackets where the studs are located. You can count at least 5-10 lbs per header block depending upon the type and length of the flexible hose attached to each block.

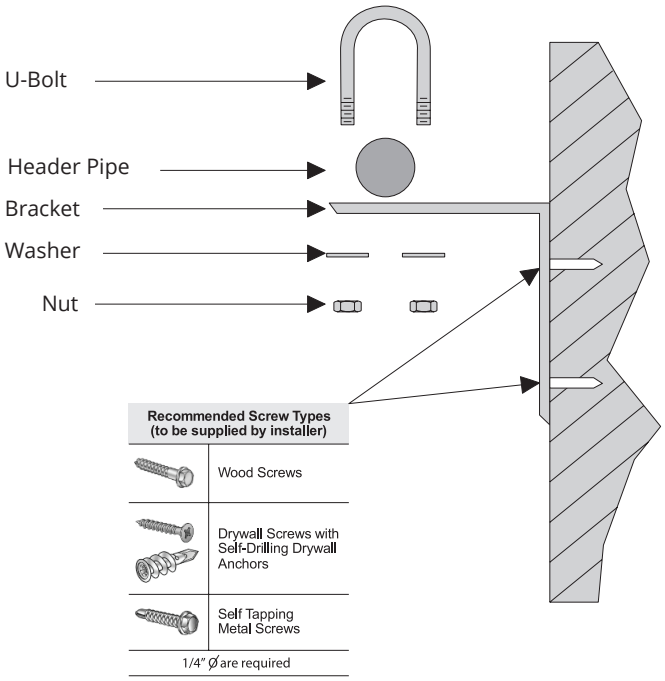

Figure 2.3 – Header Bars Installation

- Leveling – The header bar should be installed so that the middle of the mounting block is at 64" from the floor. A spirit level should be used to align the mounting panel horizontally.

- Tightening the header bars – Screw the union nut by hand (on the header bar) to the union adapter located on the manifold box. Tighten this connection by using TWO WRENCHES (see Figure 2.4).

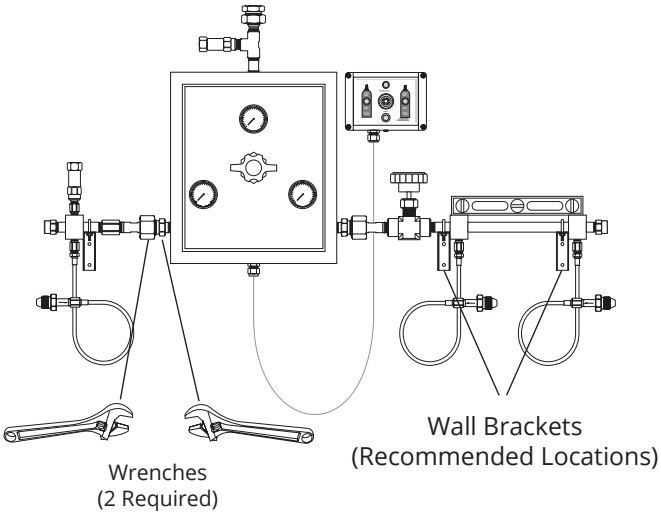

Figure 2.4 – Tightening the Header Bars

2.1.4 Relief Valve Installation

The outlet safety relief valve located on top of manifold box is equipped with a ½" F.NPT pipe away adaptor. The safety relief valve must be piped outside. We recommend the installation of a spring loaded (1/3 psi) check valve (check valve supplied by others) at the end of the vent pipe. In order to ease the installation, it is preferable to install a union close to the safety relief valve outlet. The vent pipe can not be smaller than 1/2" NPS (preferably copper ASTM B819). The end of the vent pipe must be oriented so that debris and water cannot enter the vent pipe. The low pressure header bar is equipped with a thermal expansion relief valve. Depending upon the unit we have shipped to you, this pressure relief valve outlet might be ½" F.NPT or ¼" M.NPT. In both cases, that relief valve must be piped to a safe location as well. Figure 2.5 below shows that both relief valves can be connected together and discharge in a common vent pipe.

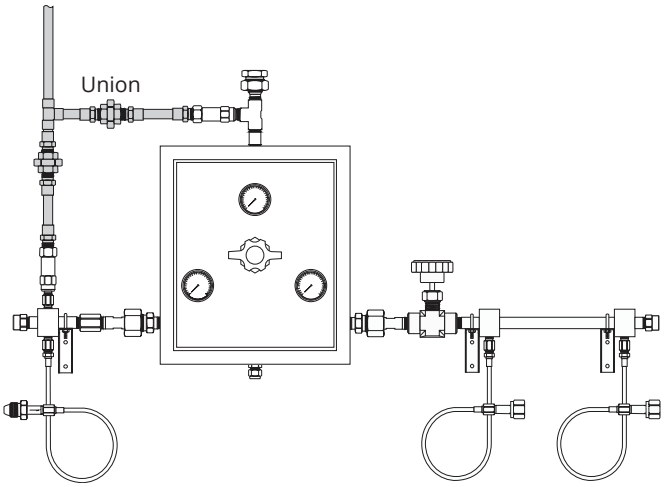

All shaded parts to be supplied and installed by others. Material compatibility between the vent pipe and the service gas has to be assessed by installer

Figure 2.5 – Relief Valve Installation

2.1.5 Supply Pipeline

In high purity piping installations, the quality of tubing and fittings used are of paramount importance. Therefore, the piping installer should be familiar with and experienced in such critical applications. Below is a list of important points to consider:

Where possible...

- Choose stainless steel tubing over copper tubing and copper tubing over soft tubing such as Teflon or nylon.
- Always verify material compatibility with the service gas.
- A good piping network is always protected against over-pressurization with a safety (pressure) relief valve (vented to a safe location).
- A valve (ball type or diaphragm type) should be installed near the regulator.
- Choose welded or brazed joints over threaded or compression joints

CAUTION

Remove all protective caps prior to assembly. The protective cap may ignite due to heat of recompression in an oxygen system.

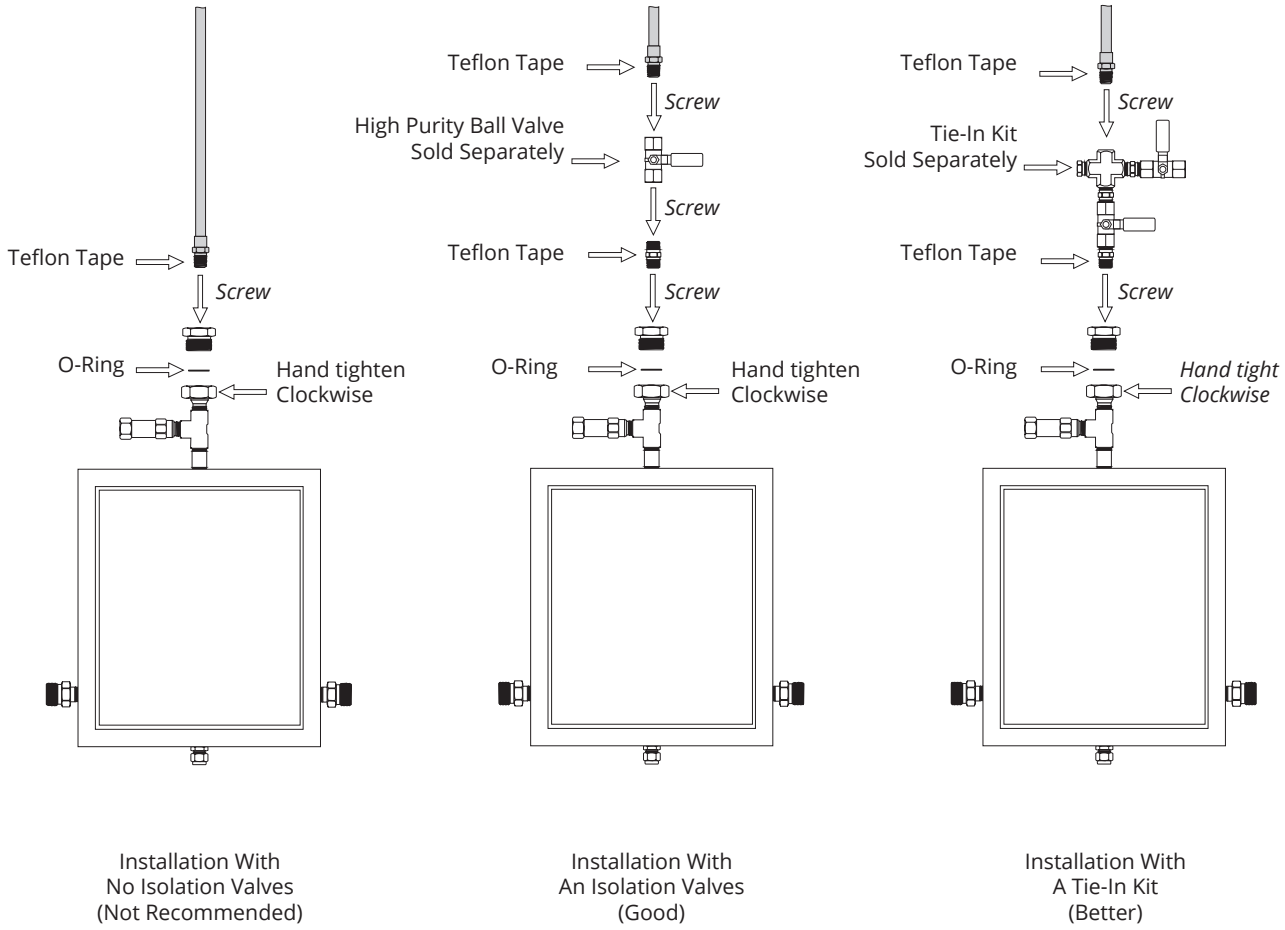

All shaded parts to be supplied and installed by others.
Material compatibility between the vent pipe and the service gas has to be assessed by installer

Figure 2.6 – Supply Pipeline

3.0 Operation

3.1 Theory Of Operation

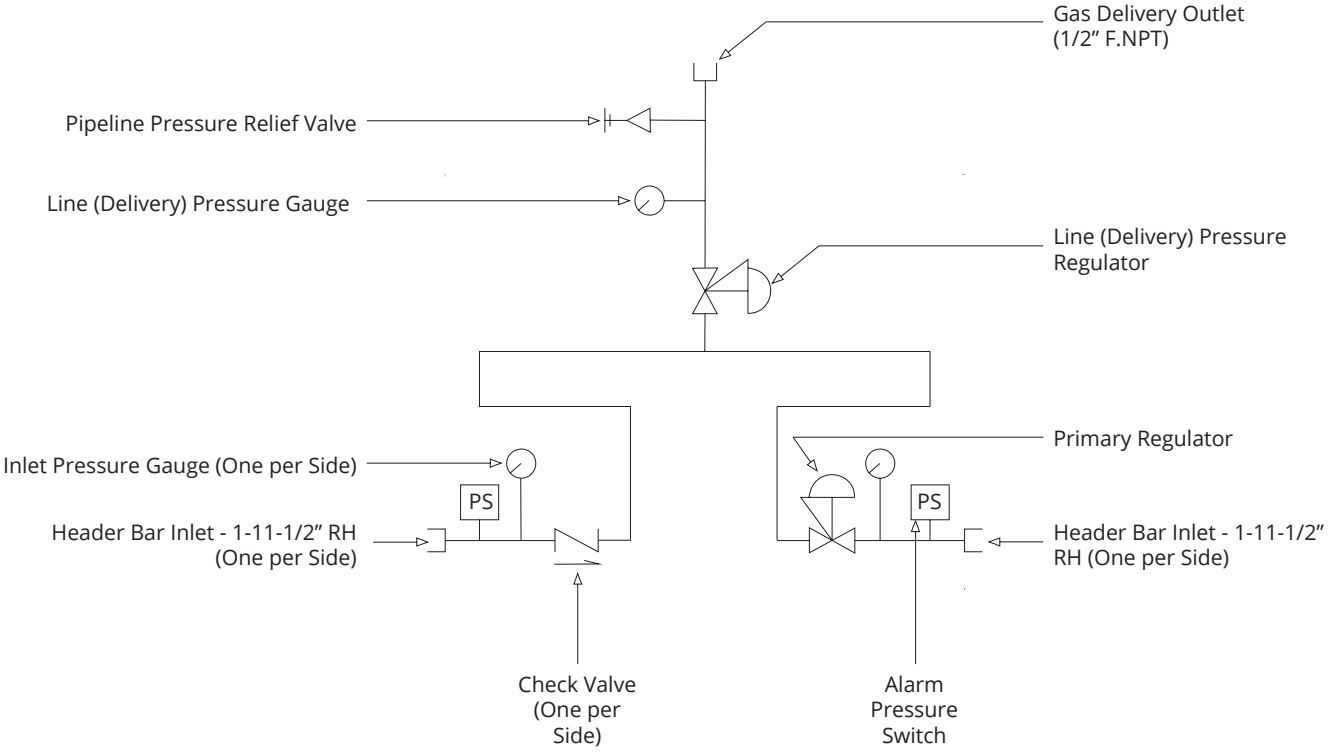

Figure 3.1 – PBUM3500 Theory of Operation

General Information

This section concentrates on the basic theory of the components of this automatic switchover back-up manifold.

Manifold Operation

The PBUM Series Automatic Switchover Back-up manifold consists of a manifold box, one low pressure main gas service header and one reserve (back-up) gas service header. This manifold can also be equipped with an optional alarm box.

The low pressure bank (normally fed by liquid cylinders) is the main supply bank. The high pressure bank is the reserve (back-up) bank. As indicated in the flow schematic above, the low pressure bank is connected directly to the line regulator. The reserve bank is connected to the primary regulator. The role of the primary regulator is to keep the pressure at a pre-determined set point (aka the switchover pressure). As soon as the liquid cylinder pressure falls under the switchover pressure (could be because the liquid cylinder is empty or it cannot maintain its "high" pressure due to high flow), the reserve bank takes over and feed the pipeline. Conversely, the pipeline will be fed by the low pressure bank when the liquid cylinder pressure climbs above the switchover pressure (ie the pressure of the primary regulator). The delivery pressure is controlled by one line regulator and is adjustable (See Delivery Line Adjustment Section). The gas exits the line regulator and proceeds past the pressure gauge and into the delivery piping.

To insure proper operation, observe the following guidelines:

1. Carefully follow all instructions.
2. Establish proper flow direction of check valves.
3. Make sure cylinder valves are fully open.
4. Replace depleted high pressure cylinders as soon as practical after the red "Bank Depleted" light comes on.
5. Make sure the pressure build-up regulator of the liquid cylinder is set correctly.
6. Make sure the pressure build-up valve of the liquid cylinder is open
7. When the low pressure bank falls in alarm, execute steps 5 and 6 above before replacing the liquid cylinder.

3.2 Leak Testing and Purging

Headers

1. Connect both high and low pressure cylinders to their corresponding header bars using the flexible hoses with the CGA nut/nipple end connections provided.
2. Use the process gas to leak test the headers. If the process gas is sensitive to atmospheric contaminants, use clean dry nitrogen as a purge gas to leak test and purge the manifold system.
3. Isolate the manifold box by closing the left bank liquid cylinder valve and right bank header valve.
4. Stand to the side of the manifold box and s-l-o-w-l-y open the gas cylinder valves from the left side of the manifold box. Repeat the same procedure for the right side of the manifold.
5. With cylinders connected, but with the cylinder valves closed, leak test all connections with either a soap solution or a gas leak detector such as Snoop®. Repair any leaks with NO pressure in the headers.
6. Purge both the right and left side headers by opening the pipeline valve for five seconds.
7. Vent the system to atmospheric pressure if the system will not be put in to service for a while.

Manifold Box

The manifold box has been factory tested and is believed to be leak free. Nevertheless, it is preferable to verify that the manifold box remains leak free before putting it into service.

1. Pressurize the left bank with the service gas.
2. Make sure the source valve (valve at the outlet of the manifold) is closed or a mean.
3. The delivery gauge should read some pressure. If not, adjust to the desired pipeline pressure by turning the regulator knob clockwise to increase or counter clock wise to decrease.
4. Shut off all cylinder valves.
5. Note the pressure of all gauges and let it sit for three hours. Any pressure decrease on any gauge would indicate a leak. Check for leaks and make repairs with NO pressure in the system.
6. Repeat steps 1-5 for the right bank.

3.3 Start Up and Checking Procedures

1. Make sure the pressure build valve is open on the liquid cylinder.

2. Make sure the pressure build regulator is adjusted above 160 psi (see your gas supplier for details).

3. **S-L-O-W-L-Y** turn on the liquid cylinder valve. If your manifold is equipped with an alarm box, the left bank green light should be lit.

4. **S-L-O-W-L-Y** open both high pressure cylinder valves and the header bar isolation valve on the right bank. The right bank pressure gauge will show the full cylinder pressure. The red "Depleted Bank" light should extinguish and the right bank green light should be illuminated.

5. Create a slight flow of gas by opening the line (source) valve. Close all valves in the system and observe the following:

   - The left bank pressure slowly falls.

   - At around 135 psi on the left bank pressure gauge, note that the pressure of the right pressure indicator starts to drop.

   - Open the left bank liquid cylinder gas use valve. The left bank inlet pressure gauge on the manifold shows the cylinder pressure.

   - The right bank pressure gauge should stop going down (if the left bank pressure gauge is above 135 psi).

6. S-L-O-W-L-Y re-open all cylinder valves and header isolation of the reserve (right bank). Your manifold is now in full service.

3.4 Cylinder Replacement

1. Shut off all cylinder valves on the depleted cylinder bank.

2. S-L-O-W-L-Y loose and remove the flexible hose connections from the depleted cylinders.

3. Remove the depleted cylinders.

4. Place and secure the full cylinders into position.

5. Connect the flexible hoses to the cylinder valves and tighten with a wrench. DO NOT OVERTIGHTEN.

6. Open the cylinder valve.

7. Using an oxygen compatible Snoop® leak detection solution, verify for leaks throughout the header from the cylinders up to the header isolation valve. Repair any leaks. Remember, the system should NOT be under pressure when making repairs.

8. The manifold supply bank is now replenished.

3.5 Line Pressure Adjustment

The pipeline delivery pressure is field adjustable. The line regulator adjustment knob is located on the front of the manifold box. Turn clockwise to increase the pressure. This pipeline regulator is a non relieving type. That means it needs flow to decrease the pressure. Therefore, to decrease the pressure, turn the line regulator knob counterclockwise while you create flow.

3.6 General Maintenance

CAUTION

Do not use leak test solution that contains ammonia. Solutions containing ammonia may cause brass tubing to crack.

1. Main control section

a. On a daily basis, maintain a record of the line pressure.

b. On a monthly basis:

1. Check regulators and valves for external leakage.
2. Check valves for closure ability.

c. On an annual basis:

1. Check relief valve pressures.
2. Check regulator seats.

1. Manifold header

a. On a daily basis, observe nitrous oxide and carbon dioxide systems for cylinder frosting and surface condensation. Should excessive condensation or frosting occur it may be necessary to increase the manifold capacity.

b. On a monthly basis:

1. Inspect valves for proper closure.
2. Check cylinder flexible hoses for cleanliness, flexibility, wear, leakage, and thread damage. Replace damaged flexible hoses immediately.
3. Inspect flexible hoses check valves for closure ability.

c. Every 4 years

1. Replace all flexible hoses

3.7 Shutdown

WARNING

Hazardous gases must be discharged into a safety vent. Be sure to use a venting procedure that is environmentally acceptable and complies with Federal, State, Provincial and local requirements.

1. Close all cylinder valves.

2. Vent the system pressure to 0 PSIG. If a hazardous gas is used, purge the entire system with clean, dry nitrogen gas. Continue purging until the hazardous gas level in the system is below the TLV for the gas.

3. Close all system valves by turning the knobs fully clockwise.

4. On the PDSM Series, close the line regulator by turning the knob counterclockwise until it reaches the stop.

4.0 Troubleshooting

4.1 Troubleshooting

Symptom	Probable Cause	Remedy Or Check
Loss Of Cylinder Contents		
Audible or inaudible gas leakage (Unknown Origin)	Leakage at manifold piping connection	Tighten, reseal or replace
	Leakage in downstream piping system	Repair as necessary
	Leakage at cylinder valve	Replace cylinder
	Gauge leaks	Reseal or replace
	Regulator leaks	Repair or replace
Venting at relief valves	Line regulator setting too high	Set delivery pressure to specifications
	Overpressure due to creeping or faulty regulation by primary regulator	Replace regulator seat and nozzle components
	Cylinder pressure is too high	Put on new cylinders with adequate pressure setting
	Overpressure due to creeping or faulty regulation by line regulator	Replace regulator seat and nozzle components
	Regulator freeze-up	Reduce the flow demand or increase the number of supply cylinders. Tighten bonnet
Gas leakage around regulator body or bonnet	Loose bonnet	Tighten bonnet
	Diaphragm leak on regulator	Replace regulator
Gas leakage around valve stem on master valve	Bonnet is leaking	Tighten packing nut
	Faulty valve	Repair or replace valve

Symptom	Probable Cause	Remedy Or Check
Loss Of Reserve Bank Contents		
Both banks feeding	Fixed-pressure regulator seat leak	Replace regulator
	Fixed-pressure regulator set to open at too high a pressure	Adjust intermediate regulator per specifications
	Flow demand too high	Reduce flow demand
Opposite bank feeding	Faulty primary regulator and/or fixed-pressure regulator	Replace regulator
Premature switchover to reserve bank	Flow demand too high	Reduce flow demand
	Liquid cylinder pressure is too low	Adjust pressure build-up regulator
	Pressure switch is set too high or too low	Re-adjust pressure switch settings
No switchover	Primary regulators are defective	Replace or re-adjust primary regulators
Pipeline Distribution		
Pipeline not at desired pressure	Line regulator not set correctly	Readjust line pressure regulator
Required gas flow not available	Line regulator not set correctly	Readjust line pressure regulator
	Flow demand too high	Consult factory

4.2 Repairs

If the manifold or any part of the switchover leaks or malfunctions, take it out of service immediately. Repairs should be made only by BeaconMedæs with the special tools, test equipment and trained personnel required to make a safe repair. Tampering with the switchover manifold voids the warranty. Please contact BeaconMedæs to arrange for any necessary repairs.

Repairs to switchover manifolds done after the initial warranty period has expired are chargeable to the customer. Upon receipt at the factory, the switchover manifolds will be inspected and you will be contacted with a repair cost estimate. No item will be repaired until approval is received. There will be an evaluation charge assessed for equipment not repaired. All repairs should be arranged through your BeaconMedæs supplier.

NOTE: All equipment being returned must be purged of all hazardous materials using a clean, dry inert gas (e.g. Dry Nitrogen) prior to return.

BeaconMedaes®

1800 Overview Drive Rock Hill, SC 29730
(888) 4-MEDGAS (888) 463-3427
Fax (803) 817-5750
www.beaconmedaes.com