LifeLine® "Oil-Free" Rotary Tooth Medical Air Water Cooled Duplex Modular System with Variable Speed Drive (50 - 74 HP)

SPECIFICATION

Modular System Design
The medical air system shall be of a modular base mounted design consisting of two compressor modules, a dryer/ control module, and an air receiver module. Each module must be fully compliant with the latest edition of NFPA 99.

Compressor Module
The compressor modules are fully enclosed with sound attenuated steel panels with full access doors for maintenance and inspection. Each compressor module includes the compressor, drive motor with variable speed drive, oil system, and a compressor control system. The compressor intake is equipped with an air intake filter and integral shutoff/unloading valve. Unloading is carried out by closing the intake valve. Loading or unloading of the unit is controlled by a pressure transducer which will actuate the loading solenoid valve. The air discharge for the compressor module has a pulsation damper, check valve and manual isolation valve. The control system will display the runtime hours, temperature readouts, pressure readouts, service indicators, safety warnings and safety shutdowns for the compressor module.

Compressor
The compressor is a two-stage, oil-free compressor block, consisting of separate low and high pressure rotary tooth compressor elements flanged to a common step-up gearbox. The compressor elements are water cooled. The high and low compressor elements are supplied with safety relief valves. The first stage air is cooled by an intercooler with moisture trap and automatic drain valve. The second stage air is cooled by an aftercooler with moisture trap with manual and automatic drain valve. The gearbox oil system includes an oil sump, pump, oil filter, bypass valve, drain connection, sight-glass and cooler.

Compressor Drive
The compressor shall be direct driven. Torque is transmitted from the motor to the compressor through a flexible shaft coupling.

Compressor Motor
The motor shall be a flange-mounted high efficiency motor, 3600 RPM, with 1.15 service factor suitable for 230 or 460 volt, 60 hertz, 3 phase electrical service.

Isolation System
The compressor and motor shall be fully isolated from the main compressor module base by means of a heavy-duty isolation system for a minimum of 95% isolation efficiency.

Dryer/Control Module
The dryer/control module shall include a central control system to control multiple compressors and a duplexed desiccant drying system with dew point hygrometer/ CO transmitters. Each dryer includes inlet filters, final line filters and regulator. All of the above shall be factory piped and wired in accordance with NFPA 99 and include valving to allow complete air receiver bypass, and air sampling port.

Dryer/Filter/Regulator System
Each desiccant dryer must be individually sized for peak calculated demand and capable of producing a -40°F (-40°C) pressure dew point. Dryer purge flow shall be minimized through an integral demand based purge saving control system. The inlet to each dryer shall include a 1 micron coalescing filter and a .01 micron high efficiency coalescing filter with automatic drains. The duplexed final line filters consist of a 1 micron particulate filter and one active carbon filter, duplexed final line regulators, single oil indicator and duplexed safety relief valves shall be factory mounted and piped. All filters shall have element change indicators. Final line regulators set for system delivery pressure of 55 psig.

Central Control System
The mounted and wired central control system shall be NEMA 12, U.L. labeled and rated for 115V single phase electrical service. The control system shall provide automatic lead/lag sequencing, visual and audible reserve unit alarm with isolated contacts for remote alarm. Automatic alternation of all compressors based on a first-on/ first-off principle with provisions for simultaneous operation if required, automatic activation of reserve unit if required, visual and audible alarm indication for high discharge air temperature shutdown with isolated contacts for remote alarm shall be included.

Dew Point/CO Transmitters
The dryer/control module shall incorporate a dew point and CO transmitter that is mounted, pre-piped, and wired. Dew point and CO conditions will be displayed on the central control system. The dew point transmitter probe shall be the ceramic type sensor. The system accuracy shall be a minimum of ± 2° C for dew point and ± 2 PPM (at 10 PPM) for carbon monoxide. Dew point alarm shall be factory set at 36° F (2° C) per NFPA 99, and the CO alarm shall be factory set at 10 PPM. Both set points shall be field adjustable. High CO and high dew point conditions shall be indicated with visual and audible alarms.

Air Receiver Module
The vertical air receiver shall be ASME Coded, National Board Certified, corrosion resistant, rated for a minimum 150 PSIG design pressure and include a liquid level sight glass, high level condensate sensor, pressure gauge, safety relief valve, manual drain valve and a automatic solenoid drain valve.

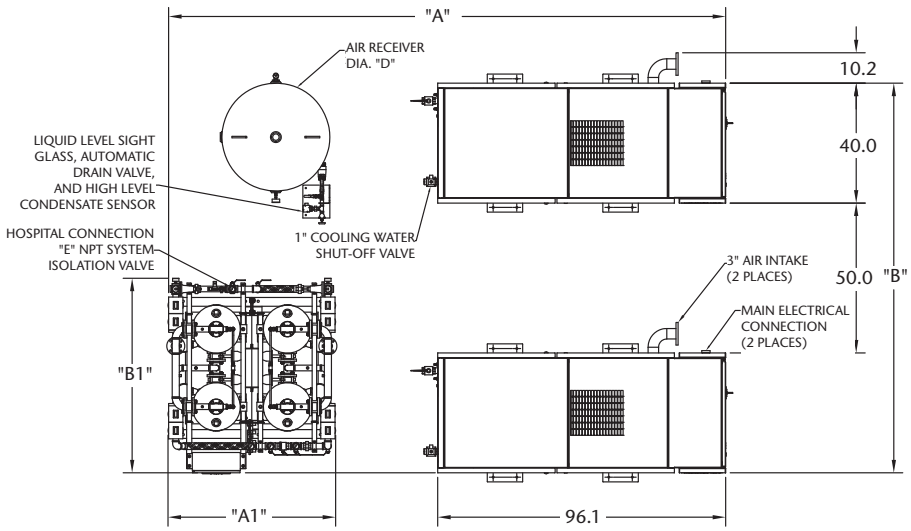

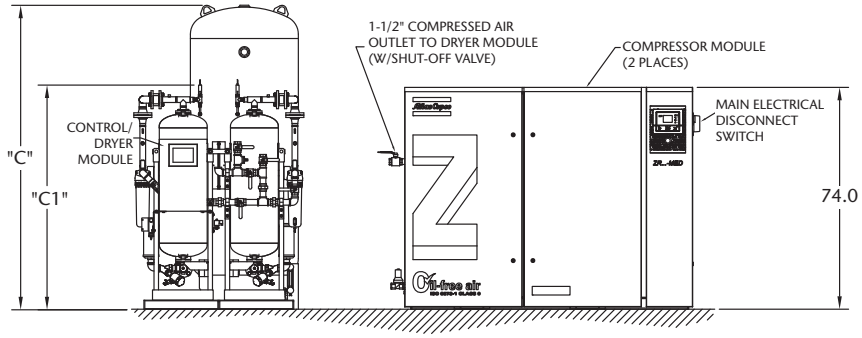

Notes:

- This is a modular system, bring high voltage power to each compressor (2 places) and 120V power to the central control panel.
- Flexible intake and discharge connections ship loose.
- No special foundation or inertia pad is required (housekeeping pad is optional). No vibration pads are necessary.
- Additional drawings/diagrams available for download at www.beaconmedaes.com.
- Consult manuals shipped with each system for pertinent installation details.

Model Number	Unit (HP)	Receiver (gallons)	Dimensions (in)								SQ Feet Required
			A*	A1	B*	B1	C	C1	D	E	
ZRM-37D-D240-D_V	50	240	180	50	130	65	94	75	30	1-1/2	163
ZRM-37D-D400-D_V		400	180	50	130	65	102	75	36	1-1/2	163
ZRM-55D-D400-D_V	74	400	186	56	130	65	102	77	36	1-1/2	168

ZR55/74 HP/400 Gal shown (4107850384-SSB)

* Suggested System Dimensions

Medical Air System Specifications[1]										
System Model No.	HP	Pump Model	Capacity FAD[2] (CFM)	System[3] BTU/HR	Receiver (gallons)	Noise[4] Level	System FLA	System Weight (lbs.)		
							460	Module[5]	Dryer	Receiver
ZRM-37D-D240-D_V	50	ZR37VSD	88-215	11,450	240	68	152	2,915	1,798	717
ZRM-37D-D400-D_V					400					737
ZRM-55D-D400-D_V	74	ZR55VSD	88-303	16,950	400	68	256	2,998	2,362	737

Notes:

1. Normal operating conditions at a maximum ambient of 105° F. Consult factory for higher ambient conditions.
2. All capacities are shown as NFPA system capacities (reserve compressor on standby). Reference conditions: absolute inlet pressure 1 bar (14.5 psi); intake air temperature 20°C (68°F); 7.5 bar (109 psi) max. working pressure. **NOTE:** System delivery pressure is 55 psig. For higher delivered pressure, contact factory.
3. All system BTU/HR are shown with reserve compressor on standby.
4. All noise levels are shown in dB(A) and reflect reserve compressor on standby.
5. Module weight represents one compressor module.

BeaconMedæs
1059 Paragon Way
Rock Hill, SC 29730
Phone: (803) 817-5600
Fax: (803) 817-5750
www.beaconmedaes.com

CERTIFIED ISO 13485
CERTIFIED ISO 14001
CERTIFIED OHSAS 18001