Notes:

1. INLET AND DISCHARGE CONNECTIONS HAVE INTEGRATED FLEX HOSE DESIGN.
2. SYSTEM WEIGHT: 1970 LBS
3. ☒ INDICATES LIFTING POINTS
4. ⊕ DENOTES CENTER OF GRAVITY

SYSTEM CONNECTIONS	
ID	DESCRIPTION
I	INLET LOCATION
D	DISCHARGE LOCATION
C	CONDENSATE DRAIN LOCATION

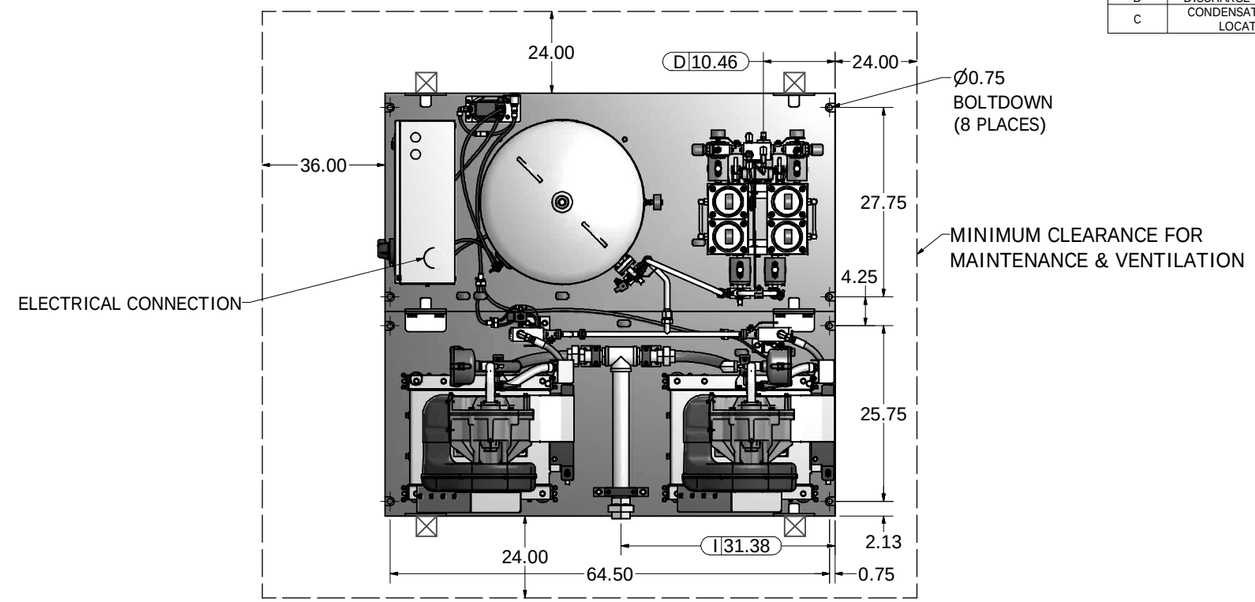

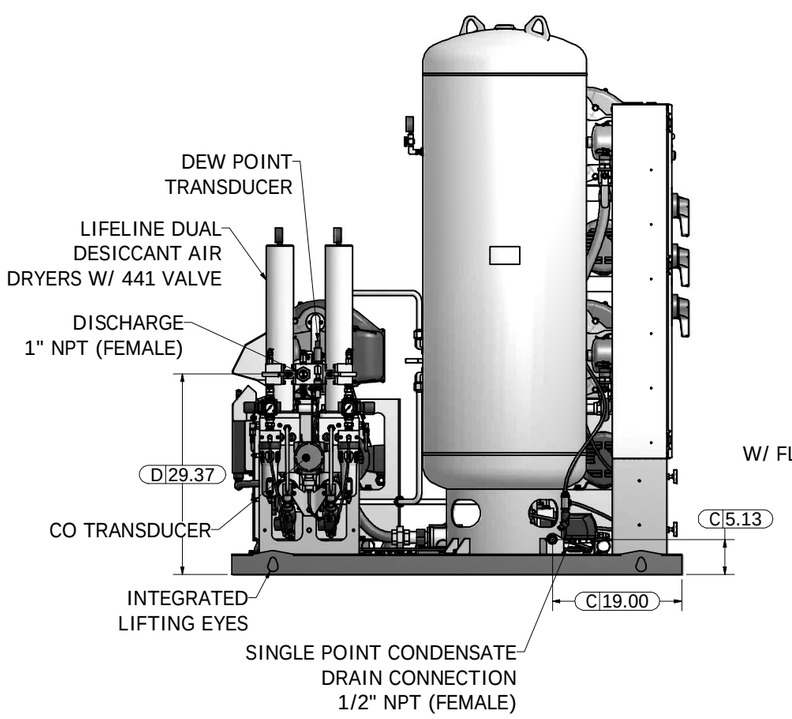

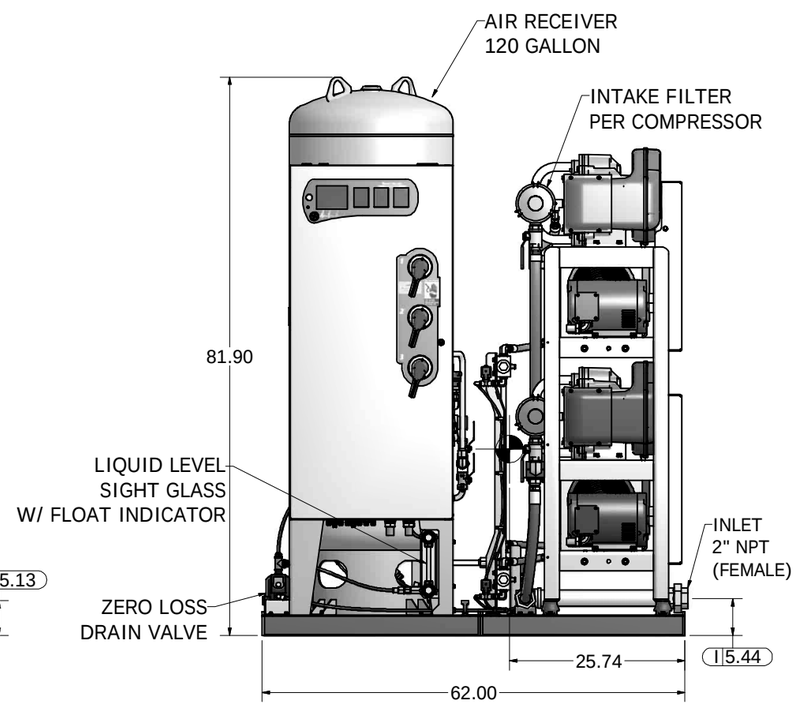

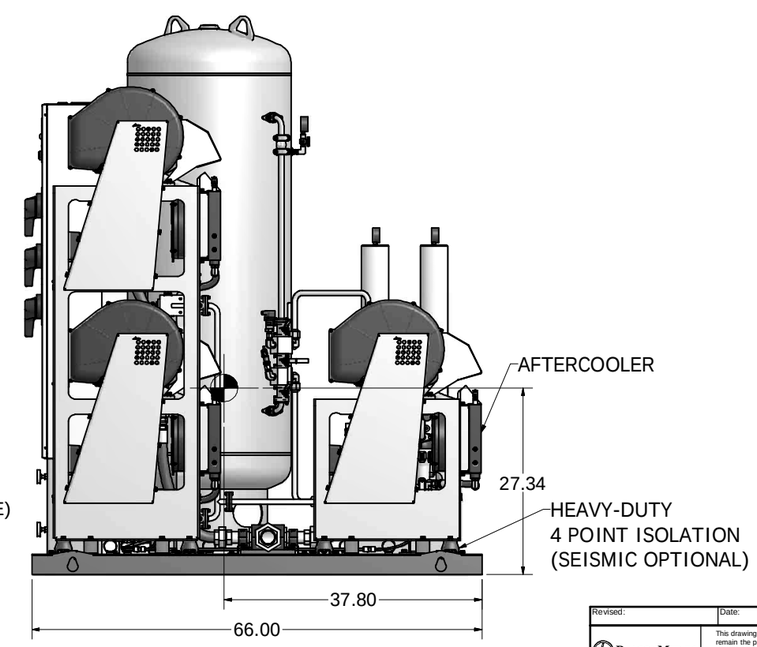

Revised:	Date:	Drawn: JDY	Date: 11/5/2009
BeaconMedaes	This drawing and the information contained thereon remain the property of BeaconMedaes and may not be used for other than the purpose for which it is loaned without the expressed written permission from BeaconMedaes Engineering.		Scale: D
Description: GENERAL ASM - LL TPX SCROLL SPC 7.5HP NFPA W/ DESC DRYER		Part Number: 4107 8511 53	
		DN: USN090129	Rev: 00
		Sheet 1 of 1	DO NOT SCALE THIS DOCUMENT