Installation, Operation and Maintenance Instructions

Oil Lubricated Instrument Air Systems

7.5 - 10 Hp

Part number 4107 9019 29
Revision 00
August 18, 2016

BeaconMedæs®

Installation, Operation and Maintenance Manual

7.5 - 10 Hp "Oil-Lubricated" Instrument Air Systems

This unit is purchased from: _____

Date purchased: _____

Model number: _____

Serial number: _____

Option(s) included: _____

Any information, service or spare parts requests should include the machine serial number and be directed to:

BeaconMedæs
1800 Overview Drive
Rock Hill, SC 29730

Telephone: (888) 463-3427
Fax: (803) 817-5750

BeaconMedæs reserves the right to make changes and improvements to update products sold previously without notice or obligation.

Part number 4107 9019 29
Revision 00
August 18, 2016

Table of Contents

Safety Precautions

Pressurized air from the system may cause personnel injury or property damage if the unit is improperly operated or maintained.

The operator should carefully read the entire contents of this manual before installing, wiring, starting, operating, adjusting and maintaining the system.

The operator is expected to use common-sense safety precautions, good workmanship practices and follow any related local safety precautions.

In addition:

- **Before starting any installation or maintenance procedures, disconnect all power to the package.**
- All electrical procedures must be in compliance with all national, state, and local codes and requirements.
- A certified electrician should connect all wiring.
- Refer to the electrical wiring diagram provided with the unit before starting any installation or maintenance work.
- Release all pressure from the affected components before removing, loosening, or servicing any covers, guards, fittings, connections, or other devices.
- Notify appropriate hospital personnel if repairs or maintenance will affect available instrument air levels.
- Air inlet must be placed in an area free of toxic or hazardous contaminants. It must be kept away from ETO exhaust vents, vacuum exhaust vents, areas close to automotive exhausts, etc., in accordance with NFPA 99.
- This is a high speed, rotating piece of machinery. Do not attempt to service any part while machine is in operation.
- To prevent automatic starting, disconnect all electrical power before performing any maintenance functions.
- Do not operate unit without belt guards, shields or screens in place.
- Make sure that all loose articles, packing material, and tools are clear of the package.
- Check all safety devices periodically for proper operation.
- Never operate a compressor with its isolation (shutoff) valve closed or without its relief valve in place. Damage to the compressor may occur.
- Compressors are “Oil-Lubricated” and proper oil levels must be maintained at all times. Failure to do so may cause damage to the compressor.
- Do not allow the compressor to run unattended in the “Hand” mode. Damage may occur.
- Electrical service must be the same as specified on the control panel nameplate or damage to the equipment may occur.
- Vibration during shipment can loosen electrical terminals, fuse inserts, and mechanical connections. Tighten all electrical connections prior to energizing the control panel.

1.0 General Information

1.1 Single Point Connection Base Mount Multiplex Standard Components

System Design

The SPC (Single Point Connection) Instrument Air system consists of multiple compressor modules, each with a dedicated desiccant dryer, and a single control module with control panel, filtration/regulator system, oil/water condensate separator and air receiver. Each module has a maximum base width of 34.5" (88 cm), and is fully compliant with NFPA 99. The modules are assembled as one unit with single point connections for the Instrument Air discharge and electrical connection.

Compressor Module

The compressor is a high pressure "oil-lubricated" continuous duty rated type. The design is a reciprocating two-stage, air-cooled, compressor with stainless steel corrosion resistant reed type valves. Both oil scraper ring and piston rings shall be made from long lasting special cast iron and designed for continuous duty operation. The crank shaft shall be constructed of forged steel and fully supported on both ends by heavy duty ball bearings and seals. The crankcase shall be constructed of gray iron. Maximum heat dissipation shall be achieved through cast iron cylinders with external cooling vanes. Cylinder sleeves are not required.

Both low and high pressure pistons are made from cast aluminum with chrome-moly piston pin. The connecting rod is of one-piece design for maximum reliability. Each compressor will have its own inlet filters installed to the first stage cylinder heads.

Compressor Drive and Motor

The compressor is v-belt driven through a combination flywheel/sheave and steel motor sheave with tapered bushing and protected by an OSHA approved, totally enclosed belt guard. A sliding motor mounting base that is fully adjustable through twin adjusting screws achieves belt tensioning.

The motor is a NEMA high efficiency type, open drip-proof, 1800 RPM, with 1.15 service factor suitable for 208 or 230/460V electrical service.

Discharge Piping

Each compressor module is equipped with an integral air-cooled intercooler/aftercooler. Discharge air from the first stage, low pressure, compressor cylinder(s) pass through the intercooler prior to entering the second stage, high pressure, cylinder. The second stage air then passes through the aftercooler and enters the dryer. The inter/aftercooler is designed for a maximum approach temperature of 12°F and comes complete with a moisture separator and zero-loss automatic drain valve. The second stage cylinder head shall be equipped with a high discharge air temperature shut down switch. The compressor discharge line includes a safety relief valve, check valve, isolation valve and flex line. The discharge air piping is made of ASTM B-819 copper tubing, brass, and stainless steel. All inlet and discharge flex lines are type 304 braided stainless steel.

Isolation System

The compressor and motor are fully isolated from the main compressor module base by means of a four point, heavy duty, spring isolation system for a minimum of 95% isolation efficiency.

Dryer

Each desiccant dryer is individually sized for peak calculated demand and capable of producing a -40°F (-40°C) pressure dew point. Dryer purge only occurs when the compressor is running. Upstream of the dryer will be a separator with zero loss drain valve followed by a 0.01 micron coalescing filter. Downstream of the dryer will be a 0.01 micron high efficiency filter. All filters shall have element change indicators.

1.0 General Information

Control Module with Filter/Regulator and Air Receiver

The control module shall include a NEMA 12 U.L. labeled control system, duplexed final line filters, regulators, oil indicators, condensate oil/water separator, dew point monitor and an air sample port. All the above shall be factory piped and wired in accordance with NFPA 99. The vertical air receiver shall be ASME Coded, National Board Certified, galvanized and rated for a minimum 250 psig design pressure. Receiver will include a pressure gauge, liquid level gauge sight glass, safety relief valve, manual drain and zero loss automatic drain valve.

Control System

The control module shall include a NEMA 12 U.L. labeled control panel. The control system shall have an HMI touch screen control, automatic lead/lag sequencing with circuit breaker disconnects for each motor with external operators, full voltage motor starters, overload protection, 24V control circuit and hand-off-auto selector switch for each compressor. Automatic alternation of compressors is based on first-on/first-off principle with provisions for simultaneous operation if required. Automatic activation of reserve units, if required, will activate an audible alarm as well as a visual alarm on the HMI. The HMI displays service due, run hours, system status, operating pressure, dew point and high discharge temperature shutdown. A complete alarm history and service history is available on the HMI.

Final Line Filters and Regulators

Fully duplexed carbon filters rated for 0.01 micron with element change indicators, along with duplexed final line regulators, are factory mounted and piped. Oil indicators are installed between the filter and regulator and are used to detect any aerosol-mist levels of oil entrainment that may be present in the Instrument Air supply.

Dew Point Transmitter

The control module shall incorporate a dew point transmitter that is mounted, pre-piped, wired to the control panel and displayed on the HMI touch screen. The system accuracy shall be ± 2°C. The dew point alarm is factory set at -22°F (-30°C) per NFPA 99 with remote alarm contacts in the control panel.

Air Receiver

The vertical air receiver is ASME coded, National Board certified, rated for a minimum 250 PSIG design pressure, galvanized and includes a pressure gauge, liquid level gauge sight glass, safety relief valve, manual drain and zero loss automatic drain valve.

1.2 SPC (Single Point Connection) Base Mount Simplex Standard Components

System Design

The SPC (Single Point Connection) Instrument Air system consists of one compressor module and desiccant dryer and one control module with control panel, filtration/regulator system, oil/water condensate separator, high pressure heard for cylinder air, cylinder restraint system and air receiver. Each module has a maximum base width of 34.5” (88 cm), and is fully compliant with NFPA 99. The modules are attached as one unit with single point connections for the Instrument Air discharge and electrical connection.

Compressor Module

The compressor is a high pressure “oil-lubricated” continuous duty rated type. The design is a reciprocating two-stage, air-cooled, compressor with stainless steel corrosion resistant reed type valves. Both oil scraper ring and piston rings shall be made from long lasting special cast iron and designed for continuous duty operation. The crank shaft shall be constructed of forged steel and fully supported on both ends by heavy duty ball bearings and seals. The crankcase shall be constructed of gray iron.

1.0 General Information

Maximum heat dissipation shall be achieved through cast iron cylinders with external cooling vanes. Cylinder sleeves are not required.

Both low and high pressure pistons are made from cast aluminum with chrome-moly piston pin. The connecting rod is of one-piece design for maximum reliability. Each compressor will have its own inlet filters installed to the first stage cylinder heads.

Compressor Drive and Motor

The compressor is v-belt driven through a combination flywheel/sheave and steel motor sheave with tapered bushing and protected by an OSHA approved, totally enclosed belt guard. A sliding motor mounting base that is fully adjustable through twin adjusting screws achieves belt tensioning. The motor is a NEMA high efficiency type, open drip-proof, 1800 RPM, with 1.15 service factor suitable for 208 or 230/460V electrical service.

Discharge Piping

Each compressor module is equipped with an integral air-cooled intercooler/aftercooler. Discharge air from the first stage, low pressure, compressor cylinder(s) pass through the intercooler prior to entering the second stage, high pressure, cylinder. The second stage air then passes through the aftercooler and enters the dryer. The inter/aftercooler is designed for a maximum approach temperature of 12°F and comes complete with a moisture separator and zero-loss automatic drain valve. The second stage cylinder head shall be equipped with a high discharge air temperature shut down switch. The compressor discharge line includes a safety relief valve, check valve, isolation valve and flex line. The discharge air piping is made of ASTM B-819 copper tubing, brass, and stainless steel. All inlet and discharge flex lines are type 304 braided stainless steel.

Isolation System

The compressor and motor are fully isolated from the main compressor module base by means of a four point, heavy duty, spring isolation system for a minimum of 95% isolation efficiency.

Dryer

The desiccant dryer is individually sized for peak calculated demand and capable of producing a -40°F (-40°C) pressure dew point. Dryer purge only occurs when the compressor is running. Upstream of the dryer will be a separator with zero loss drain valve followed by a 0.01 micron coalescing filter. The dryer outlet will have a 0.01 micron high efficiency filter. All filters shall have element change indicators.

Control Module with Filter/Regulator and Air Receiver

The control module shall include a NEMA 12 U.L. labeled control system, duplexed final line filters, regulators, oil indicators, condensate oil/water separator, dew point monitor and an air sample port. All the above shall be factory piped and wired in accordance with NFPA 99. The vertical air receiver shall be ASME Coded, National Board Certified, galvanized and rated for a minimum 250 psig design pressure. Receiver will include a pressure gauge, liquid level gauge sight glass, safety relief valve, manual drain and zero loss automatic drain valve.

Control System

The control module shall include a NEMA 12 U.L. labeled control panel. The control system shall have an HMI touch screen control, circuit breaker disconnect with external operators, full voltage motor starter, overload protection, 24V control circuit and hand-off-auto selector switch for each compressor. Automatic activation of reserve header, if required, will signal a visual alarm on the HMI. The HMI displays service due, run hours, system status, operating pressure, dew point and high discharge temperature shutdown. A complete alarm history and service history is available on the HMI.

1.0 General Information

Final Line Filters and Regulators
Fully duplexed carbon filters rated for 0.01 micron with element change indicators, along with duplexed final line regulators, are factory mounted and piped. Oil indicators are installed between the filter and regulator and are used to detect any aerosol-mist levels of oil entrainment that may be present in the Instrument Air supply.

Dew Point Transmitter
The control module shall incorporate a dew point transmitter that is mounted, pre-piped, wired to the control panel and displayed on the HMI touch screen. The system accuracy shall be ± 2°C. The dew point alarm is factory set at -22°F (-30°C) per NFPA 99 with remote alarm contacts in the control panel.

Air Receiver
The vertical air receiver is ASME coded, National Board certified, rated for a minimum 250 PSIG design pressure, galvanized and includes a pressure gauge, liquid level gauge sight glass, safety relief valve, manual drain and zero loss automatic drain valve.

Backup Air Cylinder Manifold Assembly
The manifold shall be provided to accommodate multiple air cylinders with staggered connections on 5” centers. The manifold shall be designed for inlet pressures up to 3000 psig and will include pigtail connectors with a check valve and type CGAV-1 #346 cylinder connection. A pressure regulator (field adjustable: 40 to 300 psig) shall be provided with a backup system low pressure switch. Included is a high pressure master shut off valve to isolate the header from the system during service and repairs. The manifold shall be factory installed and piped and will include a multi-cylinder restraint system for the required air cylinders (By Others).

2.0 Installation

2.1 Inspection Upon Receiving

The condition of the Instrument Air system should be carefully inspected upon delivery. Any indication of damage by the carrier should be noted on the delivery receipt, especially if the system will not be immediately uncrated and installed. Instrument Air Systems may remain in their shipping containers until ready to be installed. If the system will be stored prior to installation, they must be protected from the elements to prevent rust and deterioration.

DO NOT REMOVE the protective covers from the inlet and discharge connection ports of the modules until they are ready for connecting to the hospital's pipeline distribution system.

2.2 Handling

WARNING:

USE APPROPRIATE LOAD RATED LIFTING EQUIPMENT AND OBSERVE SAFE LIFTING PROCEDURES DURING ALL MOVES.

The Instrument Air System can be moved with either a forklift or a standard pallet jack (depending on system size). Be sure that the orange shipping spacers used to prevent the compressor and motor assembly from floating are in place. These spacers will prevent unnecessary movement of the compressor and motor while moving and mounting the compressor modules. Keep all packing in place around the dew point transmitter during installation to minimize damage. Walk along the route the unit must travel and note dimensions of doorways and low ceilings. Instrument Air Systems are modular in designed and can be unassembled to go through standard 36" doorways. Units should be positioned to ensure easy access to all four sides to perform maintenance and allow high visibility of indicators and gauges.

2.3 Location

The Instrument Air system should be installed indoors in a clean, well-ventilated environment. Areas of excessive dust, dirt or other air-borne particulate should be avoided.

Secure the package to a flat, level surface capable of supporting the weight and forces of the unit. Make sure that the main bases are not bowed, twisted, or uneven. Because of the internal flexible hose connections and spring isolators, **no special foundation is require**d. However, all main bases must be securely bolted using all mounting holes provided in the bases. If a raised concrete pad is used, the bases must not overhang the concrete pad. A method to drain away moisture is necessary. If a gravity drain is not available, a connection to a drain is necessary. **After securing the units to the floor, remove the (4) orange spacers from under each compressor base.**

The area should have an average ambient temperature of 70°F (21°C) with a minimum ambient temperature of 40°F (4.4°C) and a maximum ambient temperature of 105°F (40.5°C) (Note: At temperatures below 32oF the bare compressor will not be adversely affected, but freezing of the condensate can occur which could affect operation.)

Sound levels of 76 to 84 dbA are to be anticipated. Sound attenuating covers are not available for the Instrument Air systems. Though the sound levels are not excessive, they should be considered when locating the system.

2.4 Space Requirements

It is recommended that a minimum space of 24" be allowed on all sides of the compressor system for ventilation and maintenance. A vertical distance of 36" is required above the compressors for ventilation and maintenance.

2.0 Start Up

2.5 Piping

2.5.1 Intake Piping

NFPA 99 allows the Instrument Air unit to draw air directly from the room where the equipment is installed.

WARNING:

Instrument Air is air intended for the powering of medical devices unrelated to human respiration (e.g. surgical tools, ceiling arms). In no way should this air be used for human respiration.

Required inlet filters are installed directly to the inlet ports of the compressor heads thus eliminating any inlet piping.

2.5.2 Discharge Piping

On all Instrument Air systems, the required discharge piping size out to the hospital should be a minimum of the following sizes for each unit. Simplex 7.5/10Hp – ¾", Duplex 7.5/10Hp – ¾", Triplex 7.5Hp – ¾", Triplex 10Hp – 1", Quadruplex 7.5/10Hp – 1". All necessary flex hoses to isolate the compressors are integrated into the units design and no further flex connectors are required.

2.6 Air Cylinder Installation (If Applicable)

Simplex units are supplied with a backup air cylinder reserve manifold and a cylinder restraint system. Air cylinders must be secured in the restraint system using the chains supplied when connected to the reserve manifold.

2.7 Wiring

WARNING:

BE SURE TO DISCONNECT ALL ELECTRICAL POWER FROM THE COMPRESSOR BEFORE PERFORMING ANY ELECTRICAL PROCEDURES.

Refer to the electrical diagram provided with the unit before starting any installation or maintenance work.

Do not operate compressor on a voltage other than the voltage specified on the compressor nameplate.

All customers wiring should be in compliance with the National Electrical Code and any other applicable state or local codes.

CAUTION: An important difference between the Duplex, Triplex, and Quadraplex systems is the way control power is distributed to the compressor modules. In the Duplex configuration, all voltages will be disconnected from the compressor modules using the circuit breaker. In the Triplex and Quadraplex configurations, control voltages for the compressor modules must be disconnected separately from the motor voltages. Opening the appropriate fused knife-switch disconnect disconnects control power. Turning off the appropriate motor circuit breaker disconnects motor power.

Refer to the wiring diagram(s) that came with the compressor system for pertinent wiring connections.

Electrical power for the instrument air system must be supplied from the emergency life support circuit.

2.0 Start Up

Check the control voltage, phase, and amp ratings before starting the electrical installation, and make sure the voltage supplied by the hospital is the same. The wire size should be able to handle peak motor amp load of all operating units, refer to the full load and compressor system amperes on the wiring diagram.

Check all electrical connections within the air system that may have loosened during shipment.

Qualified electricians only should make power connections to the control panel and any interconnecting wiring.

Ensure that the emergency generation system electrical supply is consistent with the air system's requirements.

Three-phase power supplied from emergency generator(s) must match that of the normal supply to allow for correct direction of the motor rotation at all times.

3.0 System Operation

3.1 Prestart-up

The contractor should notify BeaconMedæs two weeks prior to start-up date to schedule an appointment for an authorized technician to review the installation prior to start-up.

CAUTION: Failure to install the unit properly and have a BeaconMedæs authorized technician start-up the system can void the manufacturer's warranties.

WARNING:

Prior to putting the Instrument Air system into use, the medical facility must have a Verifier perform all installation tests as specified in NFPA 99. The medical facility is also responsible for ensuring that the instrument air meets the minimum requirements as specified in NFPA 99.

Prestart-up and start-up procedures should be performed for a new installation or when major maintenance has been performed.

WARNING:

Have more than one person on hand during prestart-up and start-up procedures to ensure safety and to facilitate certain checks.

The main power source to the control panel should be "OFF" for the duration of the visual inspection.

Ensure that the equipment is installed on a solid level surface. Walk around the system to ensure that there is enough clearance on all sides to perform operational checks/actions and maintenance. The temperature of the area containing the modules should be approximately 70°F (21.1°C) with a minimum ambient temperature of 40°F (4.4°C) and a maximum ambient temperature of 105°F (40.5°C).

Check all piping system joints that might have come loose during shipment and installation to ensure they are tight.

Check the air receiver, control module, and compressors for damage.

Check the drain valves on the air receiver and compressor modules.

Check all valves for full open and full close travel. Ensure that the systems valves are positioned for proper operation. (Refer to labeling on valve handles.)

Remove the orange shipping blocks from each compressor module (4-blocks per module).

Check the electrical cabinet on the control module.

Verify electrical service. Before starting the Instrument Air system, check to see that voltage, amperage, and wire size are appropriate.

For systems supplied with a back-up Air Cylinder Manifold, check all pipe connections, flexible pigtail connections and secure all air cylinders in the restraint system using the chains supplied.

CAUTION: Electrical service must be as specified or damage to equipment may occur.

WARNING:

To prevent electrical shock, ensure that ALL electrical power to the system is OFF, including the disconnect switches and H-O-A switches on the control panel. The facility's supply circuit breaker should also be locked out.

Open the electrical cabinet by loosening the fasteners on the front.

CAUTION: Vibration during shipment and installation can loosen electrical terminals, fuse inserts, and mechanical connections. Tighten as necessary.

3.0 System Operation

Check the electrical cabinet for any broken switches, lights, etc.

Check that all motor starter connections are tight and that there are no loose objects such as terminal lugs, screws, nuts, etc., in the cabinet.

3.2 Initial Start-up

Note: See Fig. 3.2.1 and 3.2.2 for valve locations.

CAUTION: Complete the prestart-up procedure before continuing with the initial start-up procedure.

WARNING:

To prevent electrical shock, ensure that ALL electrical power to the system is OFF, including the disconnect switches and H-O-A switches on the control panel. The facility's supply circuit breaker should also be locked out.

WARNING:

Ensure that all loose articles, packing material, and tools are clear of the system prior to start-up.

Set disconnect switches to the "OFF" position.

Set the H-O-A switches to the "OFF" position.

Check all voltages supplied to the Instrument Air system to ensure they are the required values and phases needed by the control panel.

Open the outlet isolation valve on each compressor module.

Open the outlet isolation valve on each dryer unit.

Open the receiver isolation valves on the control/filter module.

Close the receiver bypass valve on the control/filter module (no bypass valve on simplex unit with air cylinder back-up.).

Close the dew point transmitter isolation valve.

Close the discharge valve.

Close the discharge sample valve.

Apply power to the system and turn on the disconnect switches.

HMI display screen comes on in control panel.

Turn on power switch located on the face of each dryer.

On Simplex units only, Close the master shut-off valve and open the air cylinder valves.

Check for correct rotation of each compressor by momentarily turning the H-O-A switch to the "Hand" position and observing rotation. Rotation direction indicators are located on the beltguard and the compressor sheave. Correct the rotation, if required, by switching the motor leads at the starter.

Remove power before working on any electrical connections.

Start each compressor by turning the H-O-A switch to the "Auto" position. High dew point and lag alarm will sound, push reset button to silence horn. Allow each compressor module to operate for a short time (15 to 30 seconds) and check for any unusual noises or vibrations.

If everything appears normal, allow each compressor to run in the "Auto" mode until pressure builds in the air receiver. The lead compressor should stop when the pressure reaches 215 psig. Check for any leaks in the piping that may have developed during shipping. Repair leaks, if needed.

3.0 System Operation

The dryer will only operate when its corresponding compressor is running. Check for green "Power on" light on face of dryer when compressor is running. Observe the dryer and verify each dryer cycles between the 2 towers located inside each unit. When the compressor/dryer module shuts down visually check the pressure gauges on the face of the unit to verify the pressure between the 2 towers equalizes. (See Appendix A for complete dryer information).

Open the dew point transmitter isolation valve.

Slowly open the discharge sample valve to allow air to flow directly into the room.

Adjust the pressure regulator setting if necessary.

Adjust discharge flow rate through the sample valve so unit runs continuously until the dew point reading on the HMI display drops below -30°C. At this point the dew point alarm will reset itself.

Slowly start to close discharge sample valve and allow the unit to build pressure to 215 psig and turn off.

3.3 Normal Start-up

Note: See Fig. 3.2.1 and 3.2.2 for valve locations.

Hospital shutoff valve - CLOSED.

Isolation (discharge) valves - OPEN.

Receiver bypass valve, if equipped- CLOSED.

Outlet valve on each dryer - OPEN.

Main electrical power - ON.

Disconnect switches - ON.

Turn on power switch located on the face of each dryer.

H-O-A switches - AUTO (starting all compressor units).

Pressure gauge increasing to 215 psi (1483 kPa).

Check that each compressor shuts down as it reaches its off-limit pressure.

Check that the mainline regulator is set for the desired output pressure and adjust if necessary.

For Simplex units only: Slowly open the master shutoff valve on the Back-up Air Cylinder Manifold after the receiver pressure exceeds 200 psi.

Slowly OPEN the hospital shutoff valve.

Note: Opening the hospital valve may cause a pressure demand that brings the lag compressors back on-line. This is a normal sequence.

Note: The Instrument Air system is now on-line and in the Normal Operating Mode (lead/lag operation).

To verify dryer operation, refer to Appendix A for desiccant dryers.

3.0 System Operation

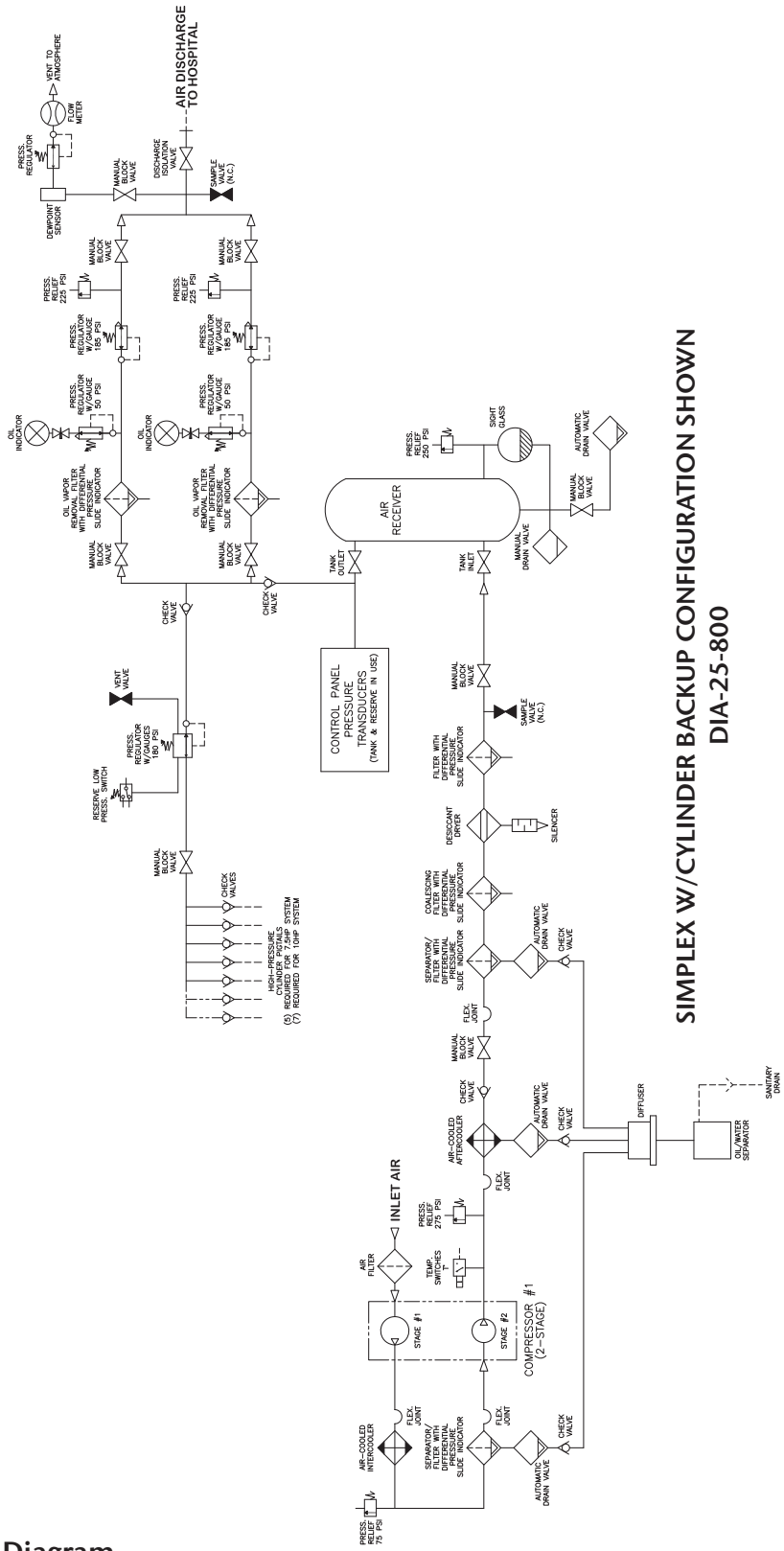

FIG 3.2.1 Simplex Piping Diagram

3.0 System Operation

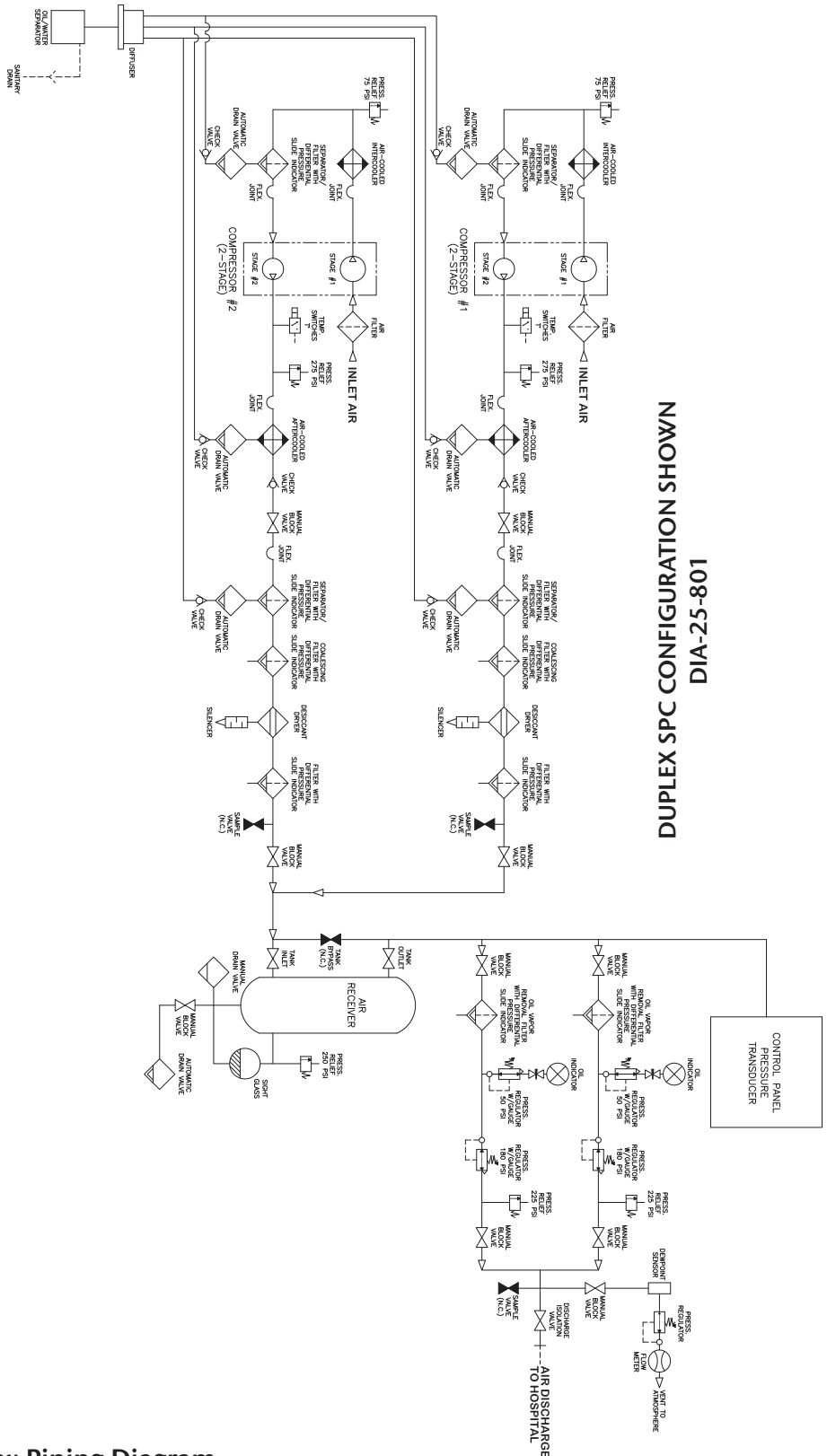

FIG 3.2.2 Duplex Piping Diagram

3.0 System Operation

3.4 Normal Operation

3.4.1 Controls

During normal operation, all H-O-A switches should be turned to the "Auto" position so that the PLC (Programmable Logic Controller) can effectively control the system. The PLC monitors the system pressure settings, starts and stops the compressors depending on changing pressure conditions, and automatically alternates the lead position between compressor units.

In a typical **duplex** system, one compressor will be able to handle the system load. The PLC will signal the lead compressor to start when the pressure transducer (TDS-1) senses the receiver pressure falls to 205 psig. If one compressor can carry the load, then the compressor will run until the receiver pressure rises to 215 psig and PLC will send a signal to turn off the lead compressor.

When the system pressure drops again and the PLC sends a signal to start the compressor it will automatically sequence the lead role to the other compressor. This is also known as "first on/first off" instead of the more traditional "last on/first off". With the "first on/first off" sequencing technique, starts and stops on the compressor are minimized.

If the lead compressor runs continuously in lead for more than 17 minutes, the PLC will automatically switch to the other compressor in an attempt to evenly distribute the run time among all available compressors. If during operation, the pressure drops below 200 psig the second compressor will come on in addition to the lead compressor, the PLC will turn on the "Lag Alarm" (see Section 3.6) and display a visual indication on the HMI as well as an audible alarm.

In a **triplex** or **quadruplex** system, the operation is very similar to the duplex operation described above with the following differences. With a triplex or a quadruplex system, the lag unit running alarm may not necessarily correspond to the third or fourth compressor coming on. To determine when the PLC turns on the lag alarm, it counts the number of units in the "Auto" position and makes a decision based on the pressure transducer signal. For example, in a quadruplex system with only 2 H-O-A switches in the "Auto" position, the lag alarm will turn on when the second unit is turned on.

Note: For a compressor to be considered available to the system, its H-O-A switch must be in the "Auto" position.

For maintenance, or other reasons, the compressors can operate in the "Hand" position. In this condition, the compressor in the "Hand" position will start and stop depending on the Backup Pressure Switch condition. The Backup Pressure Switch should be adjusted so that its cutout pressure is 215 psi. The switch has roughly a 20 psi minimum differential making the cut-in pressure around 195 psi. See section 6.3.1 for setting the Back-up Pressure Switch.

3.4.2 Dryers

This fully automatic, heat-less type dryer alternately cycles the compressed air flow through two desiccant charged towers where the air's vaporous moisture content is adsorbed. One desiccant tower is always on-line in a drying cycle throughout normal dryer operation. The opposite, off-line tower is in a regeneration cycle for removal of the previously adsorbed moisture content. Each dryer only operates when its corresponding compressor is running. (See appendix A for more details)

3.0 System Operation

3.5 Normal Shutdown

H-O-A switches-OFF.

Disconnect switches-OFF.

Main power source-OFF.

System discharge valve-CLOSED.

Air receiver manual tank drain-OPEN.

Pressure gauge decreasing to 0 psi (0 kPa).

Close air receiver manual tank drain when pressure decreases to 0 psi (0 kPa).

3.6 Emergency Shutdown / Alarms

The following conditions may arise during operation.

3.6.1 High Air Temperature Shutdown

This will shut down the compressor in question. Press the reset button to silence alarm and turn off indicator light on HMI. If indicator light stays "ON" the high air temperature still exists. Before restarting the unit, the condition should be checked (see "Compressor runs hot" in the Troubleshooting Section 4.0). Push reset button to clear alarm. Even after pushing the button, the unit may not re-start, depending on system sequencing and system pressure.

3.6.2 Motor Overload Shutdown

This will shut down the compressor in question and unit will not re-start until the reset button on the starter inside the main control cabinet is reset. See "Motor overheating" in the Troubleshooting Section 4.0. Press the reset button on front panel to silence the alarm. The indicator on the HMI will remain on until motor starter is reset.

3.6.3 Lag Unit Running Alarm

This alarm will activate if the last available compressor unit comes on. Press the reset button to silence the alarm. If the condition is corrected at this time both the alarm and indicating light will turn off. If a lag condition remains the indicating light on the HMI will remain on. Once the lag condition is corrected, press the reset button again to turn off alarm light on HMI. In the case of a duplex system, it will activate when the second compressor turns on based on the signal from the pressure transducer.

In the case of a multiplex system, the lag alarm will activate when the last available unit is required to come on. For example, in a quadruplex system, if all four (4) H-O-A switches are set to "Auto", then the lag alarm will trigger when the fourth unit comes on. If on the same system, three (3) of the four (4) H-O-A switches are set to "Auto" and the other to "Off" or "Hand", then the lag alarm will activate when the third unit comes on. In the event the lag alarm is persistent, check to see if any leaks or valves are open downstream or reduce the system load.

3.6.4 Service Due

Service intervals and type of service are preprogrammed into the HMI. An indicating light on the HMI will turn on when one of theses services are required. See HMI Operation (Appendix E) for services covered and schedules.

3.6.5 Failed Start

This alarm will activate if the compressor module failed to start/run when signaled to start. This alarm will also activate when a Motor Overload Shutdown occurs. Press the reset button on the front panel to silence the alarm (see "Failure to start" in the Troubleshooting Section 4.0). The indicator light on the HMI will remain on until the problem has been fixed and the reset button pushed again.

3.0 System Operation

3.6.6 TDC Alarm

This alarm will activate if the Pressure Transducer signal circuit is lost or the Transducer malfunctions. Press the reset button on the front panel to silence the alarm (see Appendix C, Section C.7). The system pressure reading on the HMI display will read “0 psig” when this alarm occurs. The Instrument Air system will continue to run off the Backup Pressure Switch.

3.6.7 Reserve In Use (systems with air cylinder back-up only)

This alarm will activate when the air receiver pressure falls below 180 psig. At this point instrument air from the cylinder bank will start flowing through the reserve header regulator into the main supply line to maintain the minimum supply pressure at 180 psig. Press the reset button on the front panel to silence the alarm. The indicator light on the HMI will remain on until the receiver pressure exceeds 180 psig and the reset button is pushed again.

3.6.8 Low Reserve Pressure (systems with air cylinder back-up only)

This alarm will activate when the air cylinder back-up reserve pressure falls below 1500 psig. This alarm is supplied with an auxiliary set of contacts for connection to the main alarm system in the medical facility. Press the reset button to silence the alarm. The indicator light on the HMI will remain on until the problem has been fixed and the reset button pressed again.

3.7 PLC Failure Operating Condition

If a PLC failure occurs the system will continue to operate. The HMI screen will display the dewpoint, pressure and hours readings as “0” (See FIG 3.7.1). No alarms will be displayed.

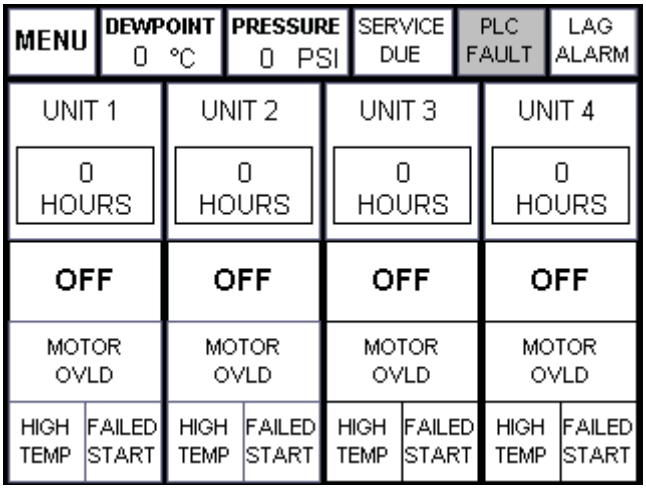

Fig. 3.7.1 PLC Failure HMI Screen Display

During a PLC failure the system will operate off the backup pressure switch and allow the system to continue to operate until the PLC is repaired. Assuming all the compressor selector switches were set to the “AUTO” position prior to the PLC failure, the following number of units will continue to run when signaled by the back-up pressure switch.

- Quadruplex: Three out of four compressors will run simultaneously when signaled by the back-up pressure switch.
- Triplex: Two out of three compressors will run simultaneously when signaled by the back-up pressure switch.
- Duplex: Both compressors will run simultaneously when signaled by the back-up pressure switch.
- Simplex: One compressor will run when signaled by the back-up pressure switch

To help reduce the electrical surge of the system when signaled to start, switch some of the compressor units from “AUTO” to “HAND” on the main control panel. The units in the “HAND” position will start 10 seconds after the units in the “AUTO” position start. Once the PLC has been fixed all the selector switches can be set back to “AUTO”.

4.0 Trouble Shooting

Problem	Possible Causes	Solution
Failure to start	Main power disconnected	Turn on main power
	Power failure	Restore power
	Main fuse blown	Replace fuse
	Fuse blown in control circuit	Replace fuse
	Overload tripped on starter	Reset & check for system overload
	High temperature switch activated	Allow unit to cool; reset switch & check for over temperature condition
	Pressure switch open	Adjust or replace switch
	Loose or faulty connection	Check & tighten all wire connections
Power failure	Main fuse blown	Replace fuse
	Fuse blown in control circuit	Replace fuse
Compressor shuts off unexpectedly	Overload tripped on starter	Reset & check for system overload
	Transducer fault	Replace transducer
	High temperature switch activated	Allow unit to cool; reset switch & check for over temperature condition
Motor overheating	Low voltage	Check for supply voltage
	V-belt too tight	Adjust for belt tension
	Defective motor	Contact **BeaconMedæs**
Compressor runs hot	Wrong rotation	Switch motor leads
	Incorrect pressure setting	Replace transducer
	Faulty compressor valves	Contact **BeaconMedæs**
	Check if valve or line to receiver is leaking or plugged	Replace if neccessary
	Intake filter clogged	Clean or replace
	Dryer filters clogged	Clean or replace

4.0 Trouble Shooting

Problem	Possible Causes	Solution
Wrong direction of rotation	Motor wired incorrectly	Switch motor leads
Low discharge pressure	System piping leaks Defective transducer Belts slipping Intake filter clogged Dryer filter clogged Gasket leaks; piston ring wear	Repair leaks Replace transducer Adjust tension Clean or replace Clean or replace Replace gaskets and rings
Compressor cycles too often	System undersized Faulty transducer System piping leaks	Contact **BeaconMedæs** Replace transducer Repair leaks
Compressor won't shut off	Faulty transducer	Replace transducer
Excessive belt wear	Belt tension Belt alignment	Adjust tension Realign compressor & motor sheaves
Abnormal noise	Mounting bolts loose Belt tension Worn piston or oil scraper rings; broken valve parts	Tighten bolts Adjust tension Replace
Reserve in use (air cylinder backup if applicable)	Compressor module not running Receiver outlet valve closed	Check for alarm conditions on the HMI (See Failure to start) Check valve position and piping
Low reserve pressure	Check master shut-off valve position Low air cylinder pressure Check pressure switch setting Faulty pressure switch	Open valve Check and replace cylinders Adjust setting (See Apendix D.4) Replace switch

Note: For air dryer troubleshooting, see Appendix A.

5.0 Maintenance

5.1 Maintenance Schedule

WARNING:

ISOLATE POWER BEFORE STARTING ANY MAINTENANCE PROCEDURES, TO PREVENT ELECTRICAL SHOCK OR ACCIDENTAL STARTING OF EQUIPMENT.

WARNING:

Release all power from the package before removing, loosening, or servicing any covers, guards, fittings, connections, or other devices.

Never perform any maintenance functions while the unit is in operation.

Item	Frequency	Action
Check condensate in tank	Daily	Check dryer, check auto drain valves
Check operation of safety valve	Weekly	Manually release pressure
Check inlet air filter(s)	Weekly	Inspect and clean, replace annually
Check nuts, bolts, fittings, etc.	Monthly	Inspect and tighten
Crankcase oil level - Initial start-up or after repair	Daily: Replace after 250 hours	Drain and clean crank case and oil gauge, refill with new oil
Crankcase oil level - after initial start-up period	Every 1,000 hours	Drain and clean crank case and oil gauge, refill with new oil
Check compressor piston rings & oil scraper ring	Every 3,000 hours or (2) years	Inspect and replace if scratched or worn
Check compressor valve plates and valve parts	Every 3,000 hours or (2) years	Inspect, clean or replace
Check belt tension	Quarterly	Inspect and tighten, replace every 8,000 hours
Check flow through orifice of dew point sensor	Every 6 months	Check for flow blockage
Check dew point sensor accuracy	Every 12 months	Verify dew point sensor accuracy (contact **BeaconMedæs)**
Replace dryer pre-filters & after-filters	Yearly	Replace filter elements
Rebuild all Zero Loss Drain Valves	Yearly	Install Service Kit
Replace dryer desiccant	See Appendix A	See Appendix A

5.0 Maintenance

Item	Frequency	Action
Check oil indicator	Every 3 months	See Appendix B
Replace carbon final filter	Every 12 months	See Section 5.2 for part number
Replace condensate absorption module	Every 2 years	See Section 5.6 for part number
Grease motor bearings	Every 6 months	Grease bearings
Visually inspect reserve header (if applicable)	Daily	Inspect
Visually inspect each pigtail (if applicable)	Daily: Replace every 3-5 years	Inspect and replace if leaking
Verify manifold operation (if applicable)	Yearly	Inspect

5.0 Maintenance

5.2 Replacement Filter Elements (Individual)

5.2.1 For Serial Number Prior to 191000-0

Simplex

Replacement Filter	7.5 Hp	Qty	10 Hp	Qty
Compressor Inlet	609823000	1	609823000	2
Intercooler Separator	ELM 20 002	1	ELM 20 002	1
Dryer Inlet Separator	ELM 20 001	1	ELM 20 001	1
Dryer Prefilter	ELM 22 001	1	ELM 22 001	1
Dryer Afterfilter	ELM 22 001	1	ELM 22 001	1
Instrument Air Discharge Filter	ELM 24 002	2	ELM 24 002	2

Duplex

Replacement Filter	7.5 Hp	Qty	10 Hp	Qty
Compressor Inlet	609823000	2	609823000	4
Intercooler Separator	ELM 20 002	2	ELM 20 002	2
Dryer Inlet Separator	ELM 20 001	2	ELM 20 001	2
Dryer Prefilter	ELM 22 001	2	ELM 22 001	2
Dryer Afterfilter	ELM 22 001	2	ELM 22 001	2
Instrument Air Discharge Filter	ELM 24 002	2	ELM 24 002	2

Triplex

Replacement Filter	7.5 Hp	Qty	10 Hp	Qty
Compressor Inlet	609823000	3	609823000	6
Intercooler Separator	ELM 20 002	3	ELM 20 002	3
Dryer Inlet Separator	ELM 20 001	3	ELM 20 001	3
Dryer Prefilter	ELM 22 001	3	ELM 22 001	3
Dryer Afterfilter	ELM 22 001	3	ELM 22 001	3
Instrument Air Discharge Filter	ELM 24 002	2	ELM 24 003	2

Quadruplex

Replacement Filter	7.5 Hp	Qty	10 Hp	Qty
Compressor Inlet	609823000	4	609823000	8
Intercooler Separator	ELM 20 002	4	ELM 20 002	4
Dryer Inlet Separator	ELM 20 001	4	ELM 20 001	4
Dryer Prefilter	ELM 22 001	4	ELM 22 001	4
Dryer Afterfilter	ELM 22 001	4	ELM 22 001	4
Instrument Air Discharge Filter	ELM 24 003	2	ELM 24 003	2

Complete sets of replacement filter element kits are available that include all required filter elements for a given system. See page 5-5.

5.0 Maintenance

5.2.2 For Serial Number After 191000-0

Simplex

Replacement Filter	7.5 Hp	Qty	10 Hp	Qty
Compressor Inlet	609823000	1	609823000	2
Intercooler Separator	2901 2003 02	1	2901 2003 02	1
Dryer Inlet Separator	2901 2003 01	1	2901 2003 01	1
Dryer Prefilter	2901 0524 00	1	2901 2004 01	1
Dryer Afterfilter	2901 0524 00	1	2901 2004 01	1
Instrument Air Discharge Filter	2901 2005 02	2	2901 2005 02	2

Duplex

Replacement Filter	7.5 Hp	Qty	10 Hp	Qty
Compressor Inlet	609823000	2	609823000	4
Intercooler Separator	2901 2003 02	2	2901 2003 02	2
Dryer Inlet Separator	2901 2003 01	2	2901 2003 01	2
Dryer Prefilter	2901 2004 01	2	2901 2004 01	2
Dryer Afterfilter	2901 2004 01	2	2901 2004 01	2
Instrument Air Discharge Filter	2901 2005 02	2	2901 2005 02	2

Triplex

Replacement Filter	7.5 Hp	Qty	10 Hp	Qty
Compressor Inlet	609823000	3	609823000	6
Intercooler Separator	2901 2003 02	3	2901 2003 02	3
Dryer Inlet Separator	2901 2003 01	3	2901 2003 01	3
Dryer Prefilter	2901 2004 01	3	2901 2004 01	3
Dryer Afterfilter	2901 2004 01	3	2901 2004 01	3
Instrument Air Discharge Filter	2901 2005 02	2	2901 0531 00	2

Quadruplex

Replacement Filter	7.5 Hp	Qty	10 Hp	Qty
Compressor Inlet	609823000	4	609823000	8
Intercooler Separator	2901 2003 02	4	2901 2003 02	4
Dryer Inlet Separator	2901 2003 01	4	2901 2003 01	4
Dryer Prefilter	2901 2004 01	4	2901 2004 01	4
Dryer Afterfilter	2901 2004 01	4	2901 2004 01	4
Instrument Air Discharge Filter	2901 0531 00	2	2901 0531 00	2

Complete sets of replacement filter element kits are available that include all required filter elements for a given system. See page 5-5.

5.0 Maintenance

5.3 Replacement Filter Elements (Complete Filter Kit)

5.3.1 For Serial Number Prior to 191000-0

Kit Description	HP	Configuration	Kit Part No.	Kit Consists of:
Complete Set of System Filters	7.5	Simplex	KIT 24 001	Inlet filter(s) Separator(s) Pre-filter(s) After-filter(s) Discharge(s)
	10		KIT 24 002	
	7.5	Duplex	KIT 24 003	
	10		KIT 24 004	
	7.5	Triplex	KIT 24 005	
	10		KIT 24 006	
	7.5	Quadruplex	KIT 24 007	
	10		KIT 24 008	

Complete set of replacement filter element kits include required quantities of filter elements for a given system.

5.3.2 For Serial Number After 191000-0

Kit Description	HP	Configuration	Kit Part No.	Kit Consists of:
Complete Set of System Filters	7.5	Simplex	4107 7827 05	Inlet filter(s) Separator(s) Pre-filter(s) After-filter(s) Discharge(s)
	10		4107 7827 06	
	7.5	Duplex	4107 7827 07	
	10		4107 7827 08	
	7.5	Triplex	4107 7827 09	
	10		4107 7827 10	
	7.5	Quadruplex	4107 7827 11	
	10		4107 7827 12	

Complete set of replacement filter element kits include required quantities of filter elements for a given system.

5.0 Maintenance

5.4 Maintenance Kits, Compressors

Kit Description	HP	Kit Part No.	Kit Consists of:
Complete Overhaul	7.5	KIT 03 102	Crankshaft main bearings Connecting rod assembly Ring overhaul kit Bearing box gasket Valve kit
	10	KIT 03 103	
Ring Overhaul	7.5	KIT 03 112	Oil scrapper ring Piston rings
	10	KIT 03 113	
Valve	7.5	KIT 04 102	Air valve assembly Air valve packing Cylinder head packing Head bolt packing ring
	10	KIT 04 103	
Gasket	7.5	KIT 05 102	Bearing box gasket Air valve packing Cylinder head packing Head bolt packing ring
	10	KIT 05 103	

Maintenance kits include one set of parts for one compressor only as per kit description.

5.5 Compressor Oil Levels and Oil Change

WARNING:

USING OILS OTHER THAN THE OIL SPECIFIED IN THIS MANUAL MAY LEAD TO PREMATURE FAILURE OF THE COMPRESSOR AND VOID ITS WARRANTY.

HP	Part No.	Qty	Oil Capacity	Oil volume within red circle
7.5	OIL05-001	1	1.6 Liters (1600cc)	0.9 liters (900cc)
10	OIL05-001	1	2.0 Liters (2000cc)	1.2 liters (1100cc)

Maintain the oil level within the red circle on the sight glass located on the backside of the crankcase to ensure proper lubrication of all the internal compressor parts (FIG 5-5A, 5-5B). Running the compressor with oil levels below the minimum level (red circle) will cause the compressor to seize.

5.0 Maintenance

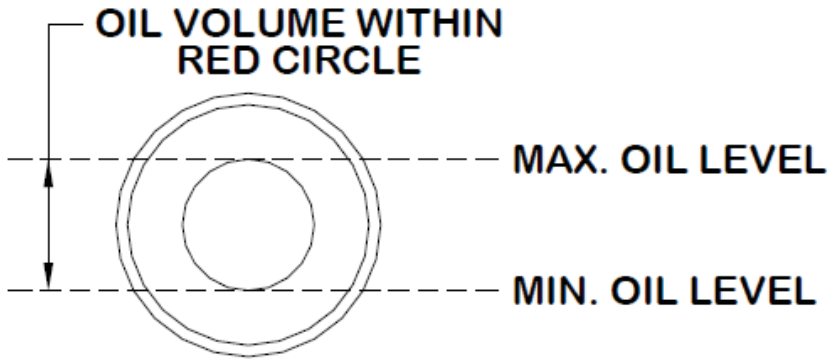

Fig. 5-5A. Oil Level Sight Glass Detail

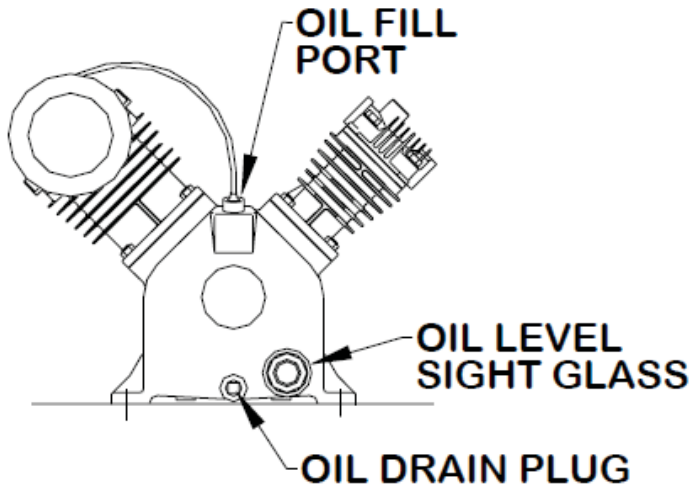

Fig. 5-5B. Oil Change Fill and Drain Ports

5.0 Maintenance

5.6 Condensate Absorption Module

The Condensate Separator uses specially coated "Zeolite" to establish a polar magnetic field that selectively targets positive and negatively charged lubricant molecules. As water is neutral, it passes through the absorption module unimpeded to deliver < 15 ppm to sanitary sewer. The absorption module is capable of extracting up to 5 gallons of lubricant before being replaced.

WARNING:

All used containers must be properly labeled and disposed of in accordance with local, state and federal regulations.

HP	Part No.	Qty Required
7.5	SEP04-011	1
10	SEP04-011	1

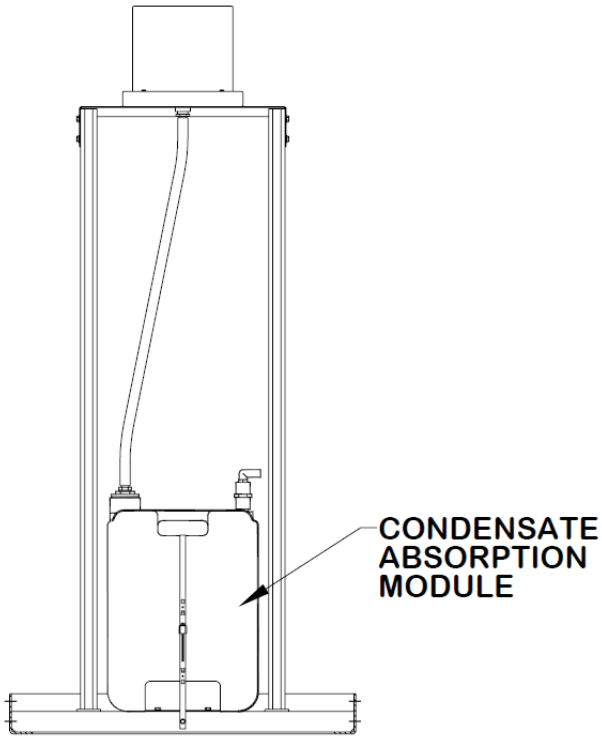

Fig. 5-6 Condensate Absorption Module

5.7 Zero Loss Drain

UFM-T05

UFM-D05

There are two different automatic drains in use with the Instrument Air Systems. The UFM-T05 (4107 6526 26) is no longer available, but a service kit is available for routine maintenance. The UFM-D05 (4107 6532 49) is the replacement model.

If the instrument air system has the UFM-T05 drain assembly on it and the drain needs to be replaced completely, it is necessary to purchase the Replacement Drain Valve Kit with the new model drain and accessory items (bracket, wire, screws) to make the replacement (4107 4005 14).

KIT NUMBER	DESCRIPTION	QTY
4107 6525 11	Kit - Zero Loss Drain Valve Service Kit - UFM-T05	1
4107 4005 14	Kit - Replacement Zero Loss Drain Valve Kit (Conversion kit from T05 to D05)	1
4107 4017 85	Zero Loss Drain Valve Service Kit for UFM-D05 (included in System Basic Service Kit)	1

Note: For service instructions on replacing the service module of the UFM-D05 Zero-loss Drain Valve, see Section 6.5.

6.0 Inspection/Replacement Procedures

6.1 V-Belts

Narrow type V-belts are used for this unit. Refer to Table 6-1 for the correct size.

6.1.1 Tension Check

Table 6-1 Belt size and Tension (for new belts)

LifeLine® Instrument Air Units							
HP	Freq (Hz)	Center Distance (In.)	Belt Size	Tensioning		No. of Belts	Part No.
				Defl. "D"	Force "F"		
7.5	50	23.97	5V900	0.37	7.5	1	BLT01-020
	60	25.27	5V900	0.39	7.5	1	BLT01-020
10	50	24.82	5V1000	0.38	8.9	1	BLT01-005
	60	24.07	5V950	0.37	9.2	1	BLT01-018

WARNING:

BEFORE STARTING ANY MAINTENANCE PROCEDURES, DISCONNECT ALL POWER TO THE EQUIPMENT.

Release all pressure from the package before removing, loosening, or servicing any covers, guards, fittings, connections, or other devices.

Never perform any maintenance functions while the unit is in operation.

Check the belt tension monthly. Disconnect the main power and remove the beltguard. As shown in Fig. 6-2, deflect each V-belt at the center of the drive span with a spring balance or tension meter at the tension force listed in Table 6-1. Then check that the average deflections at the proper tension force are approximately the same values as shown in Table 6-1.

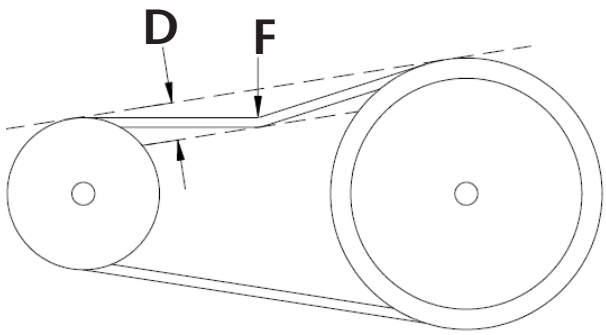

Fig. 6-1 Tension Check

6.1.2 V-Belt Tension Adjustment

If necessary, adjust the V-belts until the average deflections are within the values shown in Table 6-1.

To tighten the V-belts on the Instrument Air unit (Ref. Fig. 6-2):

1. Remove the beltguard screens.

2. Loosen the four motor mounting bolts just enough to allow the motor to slide on the mounting frame.

6.0 Inspection/Replacement Procedures

3. Turn the two belt tensioning adjustment rods on the side of the mounting frame to tighten the belt until the proper tension is obtained (see Table 6-1). To check for correct sheave alignment, place a straight edge on the faces of the two sheaves. Proper alignment is obtained when all the gaps between the straight edge and the sheaves are minimized and less than 1/8". Re-tighten the four motor mounting bolts.

4. Check the belt tension again and make sure the tension is similar to the values listed in Table 6-1.

5. Replace the beltguard screens before operating the machine.

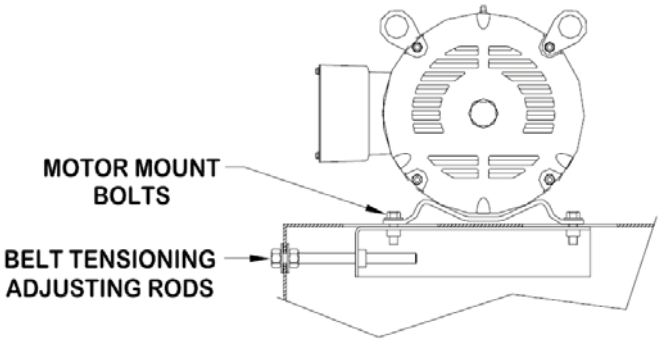

Fig. 6-2 Tension and Alignment Adjustment

CAUTION: If the compressor is operated with loose V-Belts or improper sheave alignment, the life of the V-Belts is shortened. Excessive tension can break the shaft or reduce bearing life. Be sure to maintain proper V-Belt tension and alignment at all times.

WARNING:

BEFORE STARTING ANY MAINTENANCE PROCEDURES, DISCONNECT ALL POWER TO THE EQUIPMENT.

6.1.3 Changing the V-Belts

V-belts should be changed every 8,000 hours under normal operating conditions. If any damage is found, they should be replaced at once. To change the v-belts contact **BeaconMedæs** or follow the procedures described below:

Remove the old belts:

1. Remove the beltguard screens.

2. Loosen the four motor mounting bolts just enough to allow the motor to slide on the mounting frame.

3. Turn the two belt tensioning adjustment rods and slide the motor toward the compressor to loosen belts.

4. Remove the old belt(s).

Check and Clean:

1. Check and clean all of the grooves of both the motor and compressor sheaves.

2. Check the tightness of bolts on the sheave bushings.

Installation of New Belts:

1. Confirm the belt type and length. (See Table 6-1)

2. Place the belt(s) into the grooves of both sheaves.

6.0 Inspection/Replacement Procedures

3. Turn the two belt tensioning adjustment rods on the side of the mounting frame to tighten the belt until the proper tension is obtained (see Fig. 6-1). To check for correct sheave alignment, place a straight edge on the faces of the two sheaves. Proper alignment is obtained when all the gaps between the straight edge and the sheaves are minimized and less than 1/8". Re-tighten the four motor mounting bolts.

4. Check the belt tension again and make sure the tension is similar to the values listed in Table 6-1.

5. Replace the beltguard screens before operating the machine.

6.2 Air Intake Filter

WARNING:

BEFORE STARTING ANY MAINTENANCE PROCEDURES, DISCONNECT ALL POWER TO THE EQUIPMENT.

Release all pressure from the package before removing, loosening, or servicing any covers, guards, fittings, connections, or other devices.

Never perform any maintenance functions while the unit is in operation.

The air intake filter element should be changed annually under normal operating conditions. To change the filter (Ref. Fig 6-4):

1. Turn off the compressor being serviced and lock open the appropriate disconnect switches.

2. Remove the protective cover by loosening the center wing nut and washer, remove cover.

3. Remove the element.

4. Clean inside of housing.

5. Insert a new element (note orientation of the element).

6. Replace protective cover and tighten wing nut with washer.

7. Turn on the compressor.

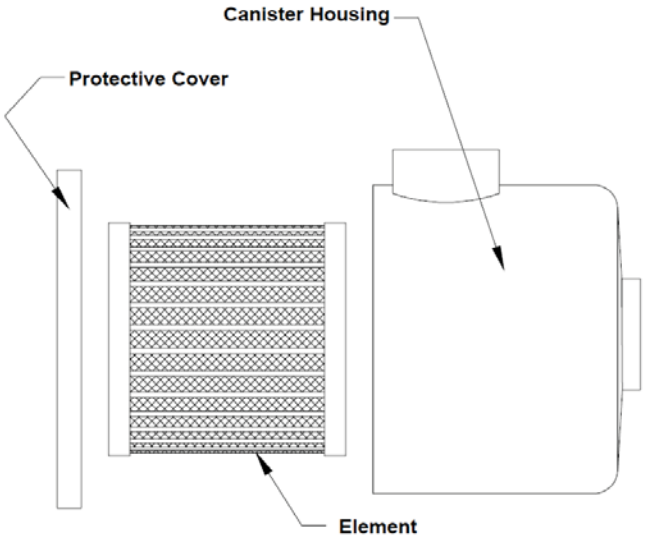

Fig. 6-3 Air Intake Filter

6.3 Cut-Out and Cut-In Pressure

The cut-out pressure refers to the receiver air pressure at which the unit will stop running. The cut-in pressure refers to the receiver air pressure at which the unit will start running. System pressure is monitored by a pressure transducer located in the control panel. Cut-in and cut-out pressures are preset in the PLC at the factory.

6.3.1 Backup Cut-Out and Cut-In Pressure switch

The backup pressure switch (PS-1) is factory set at 215 psig for cut-out and 195 psig for cut-in. The minimum differential (difference between cut-in and cut-out pressure settings) for this switch is 20 psi and is factory set prior to shipment.

6.0 Inspection/Replacement Procedures

Adjustment Instructions:

1. Remove front cover of pressure switch.

2. Turning the large self locking adjusting nut clockwise will increase the cut-out set point; counterclockwise will decrease the cut-out set point.

3. To increase the differential, turn the small self locking adjusting nut counterclockwise. As the differential is increased, the set point (cut-out) is also increased. Re-adjust the cut-out set point to 215 psi again and then recheck the differential setting. Continue balancing one adjustment against the other to obtain the desired set point.

4. Set backup switch so that cut-out is no greater than 215 psi. Damage to the compressor may occur if the cutout pressure is greater than 215 psi.

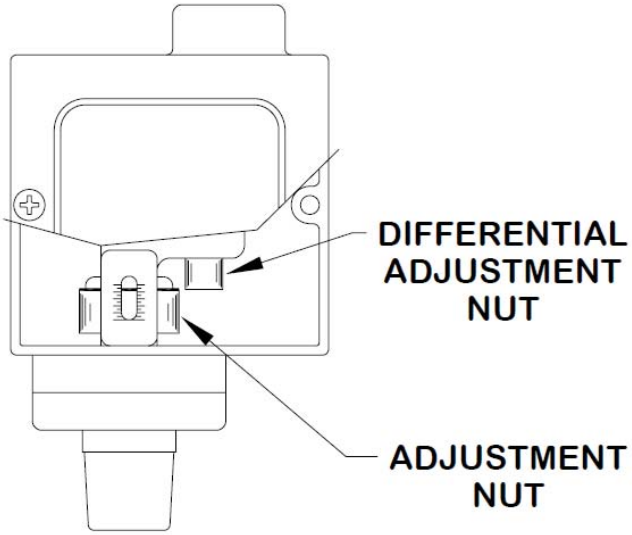

Fig. 6-4 Pressure Switch

6.4 Replacing the Air Valve Assembly

See Figure 6-5

WARNING:

To protect the lives of patients, always notify the appropriate medical facility staff before performing any maintenance or service procedures on the air system. Compressed air levels may be affected during maintenance or service procedures.

WARNING:

Turn off all electrical power to the compressor that is being serviced to prevent electrical shock hazard.

1. Turn the H-O-A Switch OFF on the compressor being serviced and lock open the appropriate disconnect switches.

2. Close the isolation (shutoff) valve of the compressor being serviced. Relieve pressure from the compressor through the pressure relief valve located on the discharge piping.

Note: Closing the isolation (shutoff) valve of the compressor being serviced allows other compressors to continue to operate without allowing a backflow of pressure into the serviced compressor.

3. Disconnect discharge air lines on the compressor being serviced.

4. Remove the outer hex head bolts and the smaller center bolt on top of the cylinder head. Remove cylinder head.

5. Remove the air valve and gasket.

6. Inspect the air valve for dirt or warping. Clean, repair or replace parts as necessary.

6.0 Inspection/Replacement Procedures

7. Reverse steps to reassemble the compressor. Replace old gaskets. Make sure that the piston is at the bottom of the cylinder when assembling the air valve.

Note: In reassembling the compressor, the recommended torque for the hex head bolts is 41 ft-lb. The recommended torque for teh center bolt on top of the cylinder head is 177 in-lb.

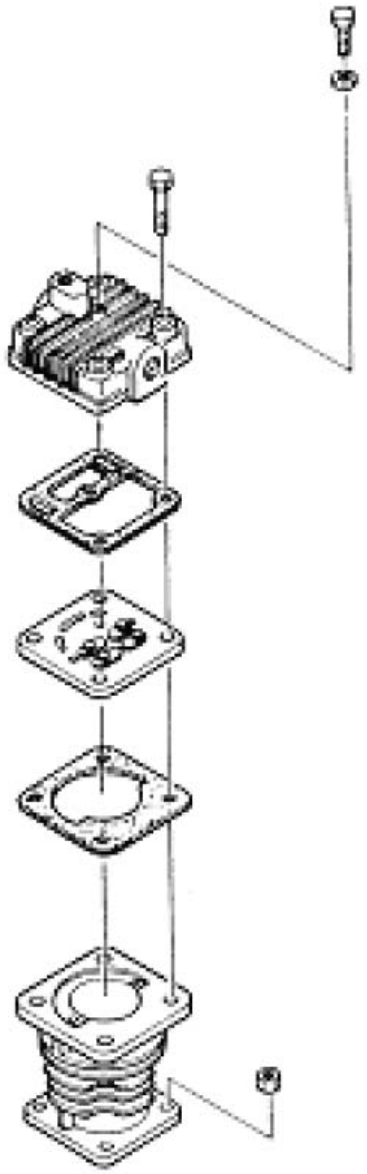

Fig. 6-5 Air Valve Disassembly

6.5 Checking/Replacing Piston Rings, Oil Scraper and Gaskets

WARNING:

To protect the lives of patients, always notify the appropriate medical facility staff before performing any maintenance or service procedures on the air system. Compressed air levels may be affected during maintenance or service procedures.

WARNING:

Turn off all electrical power to the compressor that is being serviced to prevent electrical shock hazard.

The piston rings and oil scraper must be checked periodically (refer to Section 5, Maintenance Schedule) for wear and/or damage. To check the piston rings and oil scraper and replace them if necessary.

1. Lock out power and turn the H-O-A Switch to OFF on the compressor being serviced.

2. Close the isolation (shutoff) valve of the compressor being serviced. Relieve pressure from the compressor.

Note: Closing the isolation (shutoff) valve of the compressor being serviced allows other compressors to continue to operate without allowing a backflow of pressure into the serviced compressor.

3. Disconnect the discharge air lines on the compressor being serviced.

4. Remove the four (4) nuts that secure the cylinder to the crankcase and lift the cylinder off, exposing the piston.

6.0 Inspection/Replacement Procedures

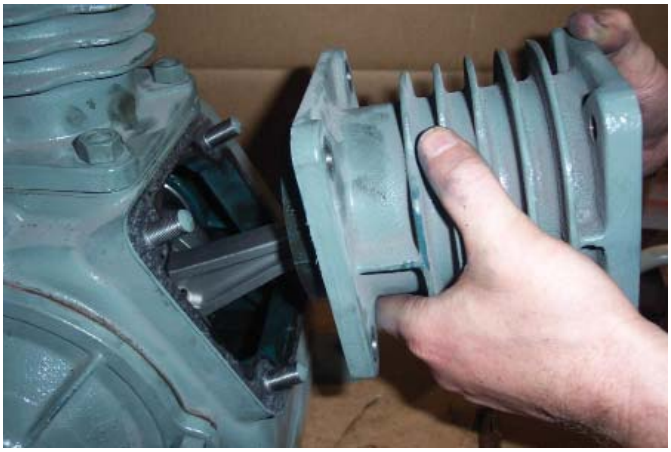

Fig. 6-6 Inspection of Piston Ring

5. Remove piston rings and oil scraper from the piston, taking care to note their position in order to ensure that if they are to be reinstalled, they are reinstalled on the same piston and in the same position as they were originally.

Fig. 6-7 Checking Piston Rings

6. Visually inspect the rings for signs of scratches or excessive wear. If present, replace all three rings as a set. Replace all 3 rings if edges of oil scrapper ring edges are worn flat below 0.005" min. as shown below.

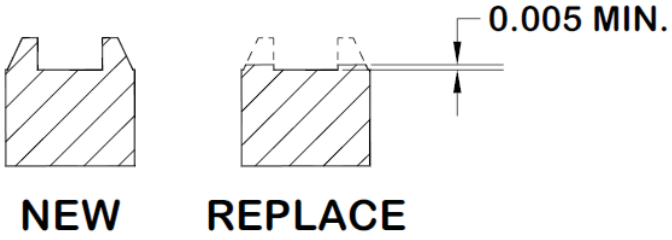

Fig. 6-8 Oil Scraper Ring Cross-Section

7. Visually inspect the inside walls of the cylinder and replace if it shows signs of wear or scratches. Refer to section 6-4 for air valve disassembly and assembly.

8. Reverse above steps to reassemble the compressor. Replace cylinder gasket with a new one.

9. Before startup, drain oil from crankcase and clean. Refill with new oil and change oil after 250 hours if new parts were installed. Note: Closing the isolation (shutoff) valve of the compressor being serviced allows other compressors to continue to operate without allowing a backflow of pressure into the serviced compressor.

Note: When reassembling the compressor, the recommended torque (Table 6-6) for the four hex head bolts and the four cylinder nuts is 41 ft-lb.

6.6 Recommended Fastener Torques

Item*	Description	7.5 Hp	10 Hp
018	Bearing box bolt	41 ft-lb	---
020	Bearing box bolt	---	41 ft-lb
035	Cylinder nut	41 ft-lb	---
037	Cylinder nut	---	41 ft-lb
043	Cylinder head bolt	41 ft-lb	41 ft-lb
045	Cylinder head bolt	---	177 in-lb
053	Cylinder head bolt	177 in-lb	---

*Refer to Illustrated parts list in section 7.0 for item identification.

6.0 Inspection/Replacement Procedures

6.7 Zero Loss Drain Valve

The following steps describe the replacement procedure for the service module of the Zero-loss Drain Valve, model UFM-D05 (See Section 5.7 to identify the Zero-Loss Drain Valve model).

1. Remove the control unit (1) by pressing the release latch (2).

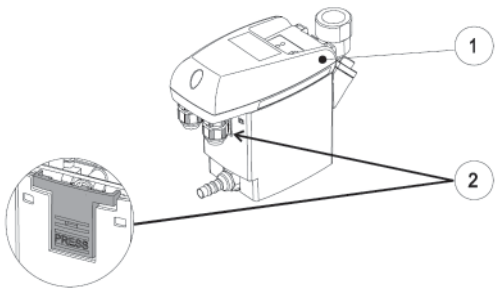

2. Remove the outlet connection (3).

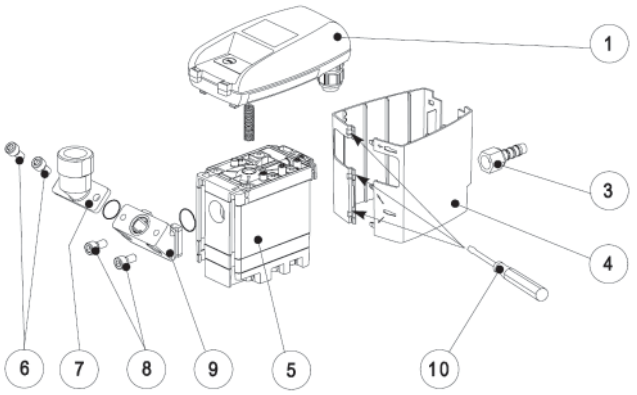

3. Remove the cover (4) using a small, flat blade screwdriver (10) and pressing the release latches.

4. Detach the inlet from the Service Module by removing screws (6) from the elbow connector (7).

5. Remove the screws (8) from the intermediate adapter (9) and remove the adapter by pulling outward, then sliding it down.

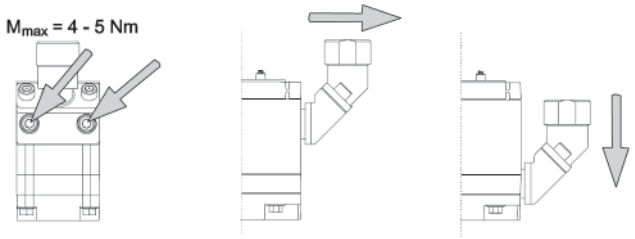

6. Ensure that the sensor tube plate (14) and contact springs (13) are clean, dry and free from impurities.

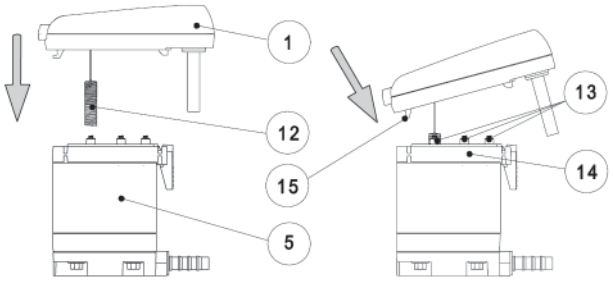

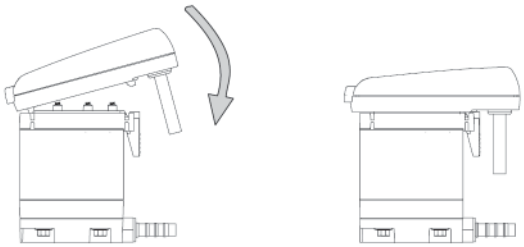

7. Insert the sensor (12) into the sensor tube plate.

8. Place the hooks (15) of the control unit (1) into the sensor tube plate (14).

9. Press the control unit down and snap into place.

10. Reassemble the intermediate adapter (9), the inlet connection (7) and outlet tube (3), tighten screws (8 & 6) to 4-5 Nm (35-45 Inch Lbs).

11. Press and hold the Reset Button for 5 seconds to reset the controls.

7.0 Replacement Parts

Any information, service or spare parts requests should include the machine serial number and be directed to:

BeaconMedæs
1800 Overview Drive
Rock Hill, SC 29730

Telephone: (888) 463-3427
Fax: (803) 817-5750

7.0 Replacement Parts

7.1 Compressor - 7.5

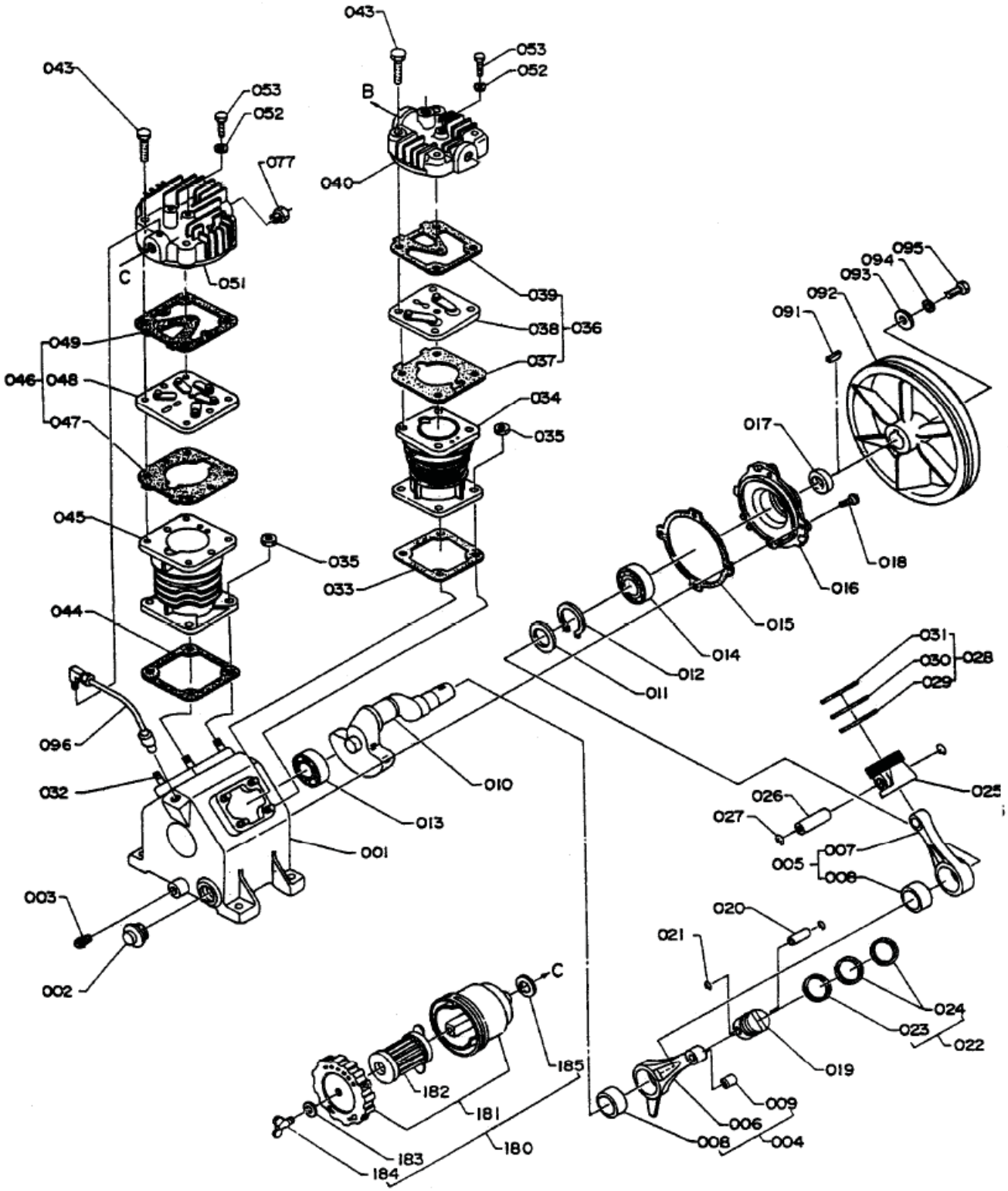

7.0 Replacement Parts

Compressor - 7.5 Hp

Ref	Part No.	Description	Qty/ Unit
001	609755001	Crankcase	1
002	609748056	Oil level gauge	1
003	NOT AVAIL	Oil cock plug (1/2B)	1
004	609754900	Connecting rod assembly	1
005	609750002	Connecting rod assembly	1
006	NOT AVAIL	Connecting rod (high press.)	1
007	NOT AVAIL	Connecting rod (low press.)	1
008	609750003	Crank pin metal	2
009	609754901	Needle bearing	1
010	609755002	Crank shaft	1
011	609750006	Crank pin washer	1
012	NOT AVAIL	Snap ring (nom. dia. 48)	1
013	NOT AVAIL	Ball bearing (6307)	1
014	NOT AVAIL	Ball bearing (6308)	1
015	609741189	Bearing box packing	1
016	609750704	Bearing box	1
017	609741747	Oil seal	1
018	NOT AVAIL	Bolt (M12x1.25x20)	4
019	609755004	Piston	1
020	609755005	Piston pin	1
021	609748035	Snap ring	2
022	609750707	Ring set	1
023	NOT AVAIL	Oil scraper ring	1
024	NOT AVAIL	Piston ring	2
025	609754706	Piston	1
026	609754707	Piston pin	1
027	609741764	Snap ring	2
028	609754708	Ring set	1
029	NOT AVAIL	Oil scraper ring	1
030	NOT AVAIL	Piston ring (2nd)	1
031	NOT AVAIL	Piston ring (1st)	1
032	NOT AVAIL	Bolt (M12X1.25X40)	8
033	609741188	Cylinder packing	1
034	609755006	Cylinder	1
035	NOT AVAIL	Cylinder nut (M12x1.25)	8
036	609755007	Air valve set	1
037	609750181	Air valve packing	1
038	NOT AVAIL	Air valve assembly	1
039	609754632	Cylinder head packing	1
040	609753607	Cylinder head	1
043	609816000	Bolt (M12x1.25x55)	10
044	609741203	Cylinder packing	1
045	609754719	cylinder	1
046	609754786	Air valve set	1
047	609754688	Air valve packing	1
048	NOT AVAIL	Air valve assembly	1
049	609814000	Cylinder head packing	1
051	609755010	Cylinder head	1
052	609665000	Packing	2
053	NOT AVAIL	Bolt (M8x1.25x35)	2
091	609742004	Compressor pulley key	1
092	609755016	Compressor pulley	1
093	609662000	Compressor pulley washer	1
094	NOT AVAIL	Spring washer (M12)	1
095	NOT AVAIL	Bolt (M12x1.25x20)	1
096	609753112	Oil port plug assembly	1
180	609755027	Suction filter assy.	1
181	609822000	Suction filter body	1
182	609823000	Suction filter element	1
183	609824000	Washer	1
184	609825000	Wing bolt	1
185	609741192	Packing	1

7.0 Replacement Parts

7.2 Compressor - 10 Hp

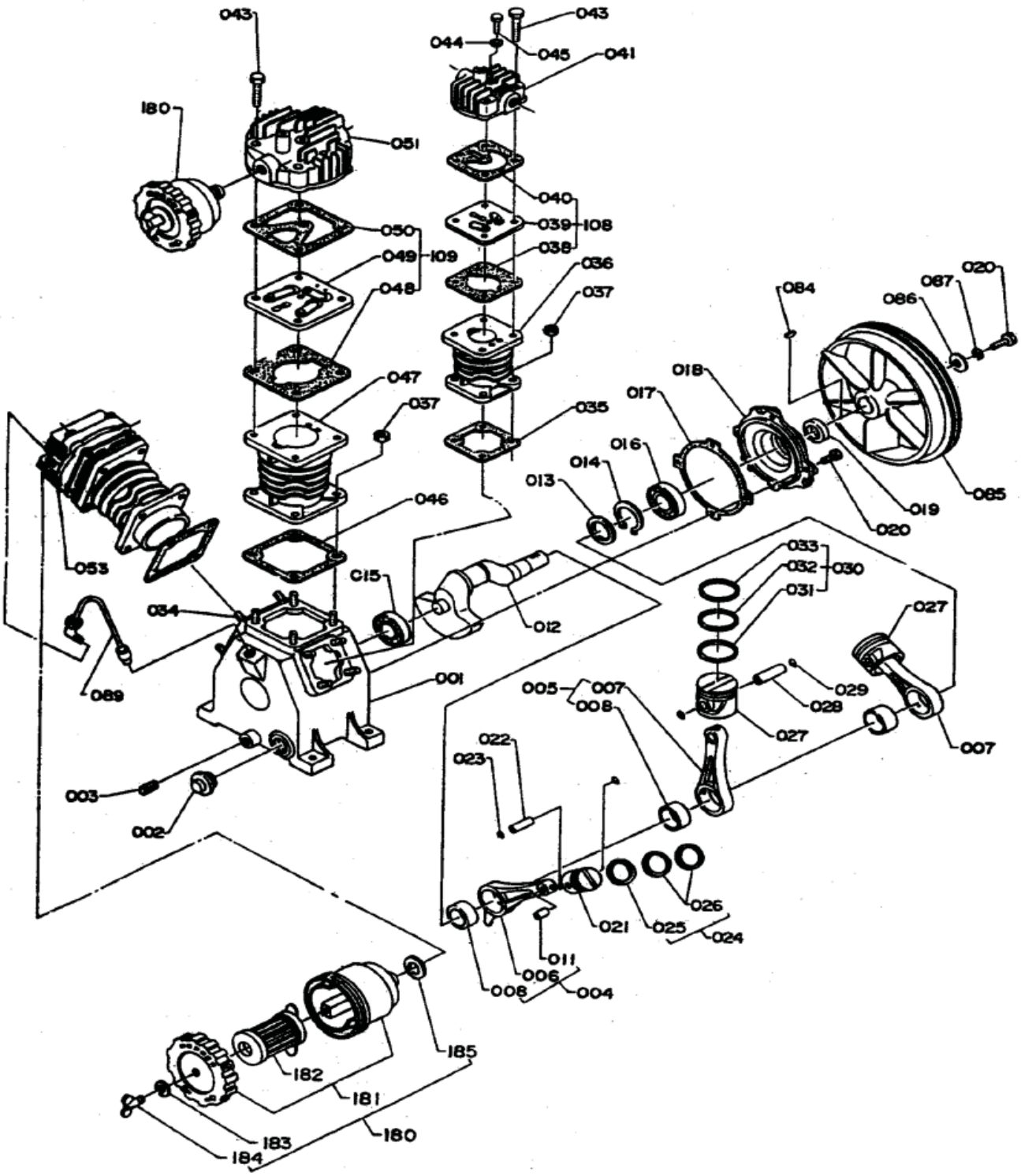

7.0 Replacement Parts

Compressor - 10 Hp

Ref	Part No.	Description	Qty/ Unit
001	609750800	Crank case	1
002	609748056	Oil level gauge	1
003	NOT AVAIL	Oil cock plug(1/2B)	1
004	609754900	Connecting rod assembly	1
005	609750002	Connecting rod assembly	2
006	NOT AVAIL	Connecting rod (high press)	1
007	NOT AVAIL	Connecting rod (low press)	2
008	609750003	Crank pin metal	3
011	609754901	Needle bearing	1
012	609750801	Crank shaft	1
013	609750006	Crank pin washer	1
014	NOT AVAIL	Snap ring (nom. dia. 48)	1
015	NOT AVAIL	Ball bearing (6308)	1
016	NOT AVAIL	Ball bearing (6308)	1
017	609741190	Bearing box packing	1
018	609750704	Bearing box	1
019	609741747	Oil seal	1
020	NOT AVAIL	Bolt (M12x1.25x20)	5
021	609754662	Piston (high pressure side)	1
022	609754663	Piston pin(high press side)	1
023	609748035	Snap ring (high press. side)	2
024	609750804	Ring set	1
025	NOT AVAIL	Oil scraper ring	1
026	NOT AVAIL	Piston ring	2
027	609754601	Piston (low pressure side)	2
028	609741756	Piston pin (low press. side)	2
029	609741764	Snap ring (low press. side)	4
030	609741802	Ring set	2
031	NOT AVAIL	Oil scraper ring	2
032	NOT AVAIL	Piston ring (2nd)	2
033	NOT AVAIL	Piston ring (1st)	2
034	NOT AVAIL	Bolt	12
035	609741187	Cylinder packing	1
036	609754602	Cylinder (high press. side)	1
037	NOT AVAIL	Cylinder nut (M12X1.25)	16
038	609754631	Air valve packing	1
039	NOT AVAIL	Air valve assembly	1
040	609754632	Cylinder head packing	1
041	609753607	Cylinder head (high press.)	1
043	609816000	Bolt (M12x1.25x55)	12
044	609665000	Packing	3
045	NOT AVAIL	Bolt (M8x1.25x35)	3
046	609741177	Cylinder packing	2
047	609754604	Cylinder (low press. side)	2
048	609750098	Air valve packing	2
049	NOT AVAIL	Air valve assembly	2
050	609751063	Cylinder head packing	2
051	609753726	Cylinder head	1
053	609754607	Cylinder head	1
084	609742004	Compressor pulley key	1
085	609754629	Compressor pulley	1
086	609662000	Compressor pulley washer	1
087	NOT AVAIL	Spring washer (M12)	1
089	609753112	Oil port plug assembly	1
108	609754655	Air valve set	1
109	609754656	Air valve set	2
180	609754912	Suction filter assembly	2
181	609754930	Suction filter body	2
182	609823000	Suction filter element	2
183	609824000	Suction filter washer	2
184	609825000	Wing bolt	2
185	609741192	Packing	2

8.0 Specifications

Table 8.1

7.5 - 10 SPC Systems Capacities						
	Simplex[1]/Duplex		Triplex		Quadruplex	
HP	Capacity[2] 200 psig	Receiver (Gallons)	Capacity[2] 200 psig	Receiver (Gallons	Capacity[2] 200 psig	Receiver (Gallons)
7.5	16.5	200	33.0	200	49.5	200
10	24	200	48	200	72	200

Notes:

[1] Simplex units come standard with reserve manifold/head to accomodate the necessary number of air cylinders for 1 hour backup. All air cylinders supplied by others.

[2] All capacities shown as NFPA system capacities (reserve compressor on standby) and are shown in Inlet Cubic Feet per Minute (ICFM).

Table 8.2

7.5 - 10 SPC Systems Capacities								
	SIMPLEX		DUPLEX		TRIPLEX		QUADRUPLEX	
Model Hp	7.5	10	7.5	10	7.5	10	7.5	10
Package Hp	7.5	10	15	20	22.5	30	30	40
Max. Pressure (PSI)	215	215	215	215	215	215	215	215
System Capacity[1] 200 PSI	16.5	24	16.5	247	33	48	49.5	72
RPM	926	828	926	828	926	828	926	828
Tank Size (Gal.)	200	200	200	200	200	200	200	200
Discharge Pipe Size (FPT)	3/4”	3/4”	3/4”	3/4”	3/4”	1”	1”	1”
Safety Valve Setting (PSI)								
Pump	275	275	275	275	275	275	275	275
Tank	250	250	250	250	250	250	250	250
Max. Ambient Temperature	105°F	105°F	105°F	105°F	105°F	105°F	105°F	105°F
Dimensions-inches								
Length	89.44	89.44	103.50	103.50	138.00	138.00	172.50	172.50
Width	67.00	67.00	67.00	67.00	67.00	67.00	67.00	67.00
Height	84.28	84.28	84.28	84.28	84.28	84.28	84.28	84.28
Weight (lbs)	2120	2225	2701	2901	3549	3849	4397	4797

Notes:

[1] All capacities shown as NFPA system capacities (reserve compressor on standby) and are shown in Inlet Cubic Feet per Minute (ICFM).

9.0 Maintenance Record

Model Number _____

Serial Number _____

Installation Date _____

Date of Service								
Hours								
Load								
Ambient Temp.								
Inlet Filter								
Crankcase Oil Change								
Belt Tension								
Piston								
Rings								
Valve Plate								
Ball Bearings								
Connecting Rods								
Misc.								
Service By								

Appendix A: Desiccant Dryer

A.1 General Information

CAUTION: This appendix is designed to serve as the operation and maintenance guide for your dryer. The contents of this appendix should be carefully read BEFORE attempting any phase of operation or maintenance. Failure to follow the operating and maintenance procedures presented herein could result in personal injury or property damage.

All information, specifications and illustrations within this appendix are those in effect at the time of printing. The manufacturer reserves the right to change or make improvements without notice and without incurring any obligation to make changes or add improvements to products previously sold.

When requesting information, service, ordering of spare parts, etc., please reference all information supplied on the serial number plate located on the backside of the dryer cover.

To facilitate maintenance, recommended spare parts for your specific dryer model are available. Failure to maintain recommended spare parts and filter cartridges might result in expensive and unnecessary downtime for which the manufacturer cannot be responsible. To request a quotation of, or place an order for, recommended or emergency spare parts, please contact the **BeaconMedæs** Technical Services department at 1-888-4MEDGAS (888-463-3427).

A.1.1 Drying Function

Dual tower regenerative desiccant dryers are utilized to dry compressed air to dew points below the freezing point of water or reduce the moisture content to low levels for use in critical process applications.

Air is dried by two identical towers, each containing a desiccant bed. While one tower is on-stream drying the compressed air, the other tower is off-stream being regenerated.

Desiccant dryers lower the dew point by adsorbing most of the water vapor present onto the surface of the desiccant. Adsorption occurs until equilibrium is reached between the partial pressure of the water vapor in the air and that on the surface of the desiccant.

Desiccant can then be regenerated by desorbing the water collected on its surface. Regeneration occurs by expanding a portion of the dried air to atmospheric pressure. This very dry air (called purge air) causes the moisture to desorb from the desiccant and then carries the desorbed water out of the dryer.

A.1.2 Separator

In line separator/filter provides 2-stage filtration. The first stage consists of two stainless steel orifice tubes providing a 10 micron mechanical separation. Second stage consists of a fiber media that captures solid and liquid particles down to 3 microns.

A.1.3 Pre-Filter

Coalescing pre-filter is used to protect the desiccant bed from solid and liquid contamination. The pre-filter provides 2-stage filtration. Stage 1 removes the larger particles, pre-filtering the air for stage 2. Stage 2 consists of multiple layers of bonded, blended fiber media for fine coalescing of water and oils while removing solid particles to 0.01 microns. (See FIG A.2.1)

A.1.4 After-Filter

After-filter is used to ensure downstream air purity and remove desiccant fines and solids to 0.01 microns to protect downstream components. The after-filter provides 2-stage filtration. Stage 1 removes the larger particles, pre-filtering the air for stage 2. Stage 2 consists of multiple layers of bonded, blended fiber media for fine filtration with an outer closed cell foam sleeve. (See FIG A.2.1)

Appendix A: Basemount Expandable

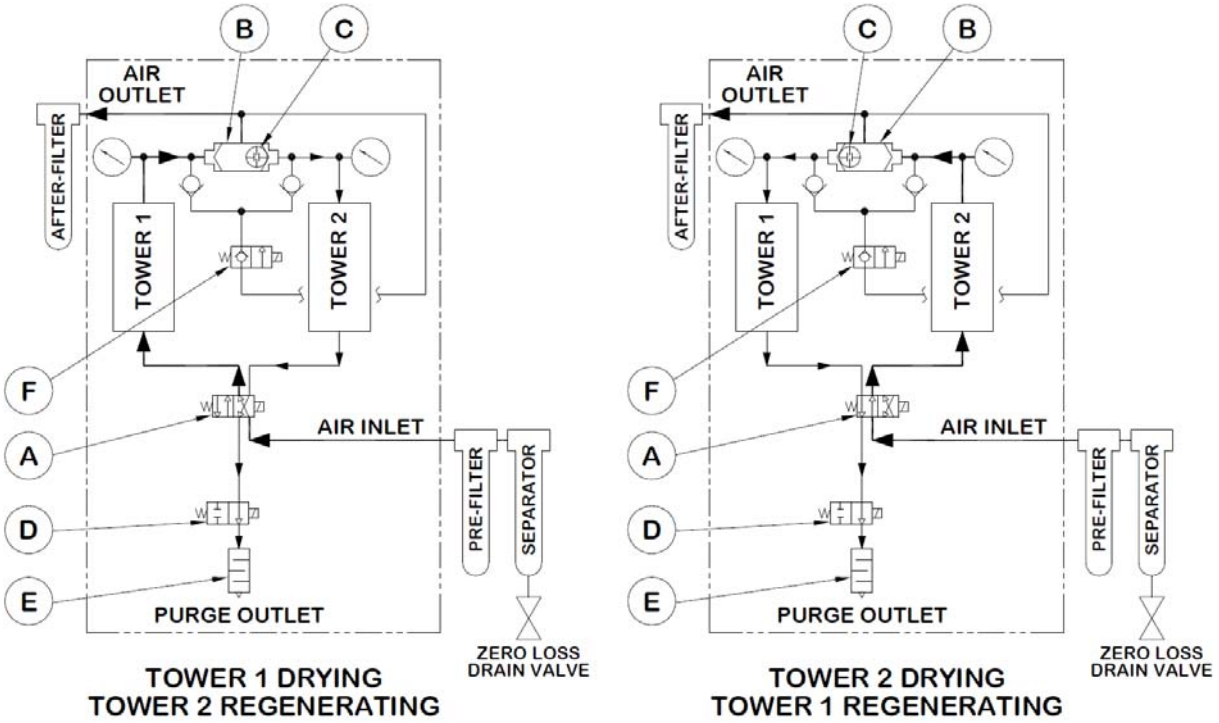

Fig. A.2.1 Desiccant Dryer Flow Schematic

A.1.5 Zero Loss Drain Valves

Zero loss drain valves are designed to open only when enough condensate is collected in the valve to contact an internal sensor. The sensor activates a solenoid and opens the valve allowing the system pressure to force condensate out of the valve. The condensate level falls inside the valve and de-activates the solenoid allowing the valve to close before any compressed air is lost. The internal reservoir and flow channels are designed to minimize the possibility of particulates fouling the valve seat and minimize emulsification of condensate. (See FIG A.2.1)

A.2 Operation

Compressed air enters the dryer and is directed to TOWER 1 through valve (A) and then exits the dryer through shuttle valve (B). A portion of the dried air is throttled to near atmospheric pressure by means of an orifice (C). This extremely dry, low pressure air flows through and regenerates the desiccant in TOWER 2 and is then exhausted through purge/exhaust valve (D) and exhaust muffler (E) to atmosphere.

After a set time, the “SMART relay” closes purge/exhaust valve (D) and opens repressurization valve (F) allowing TOWER 2 to repressurize slowly.

At the end of 2 minutes (when operating on a 4 minute cycle), valve (A) shifts and purge/exhaust valve (D) re-opens and repressurization valve (F) closes. The main air flow is now dried by TOWER 2 while TOWER 1 is regenerated.

Appendix A: Basemount Expandable

A.2.1 Startup

During the initial startup, slowly pressurize dryer to full line pressure and check entire system for leaks. Depressurize and correct any leaks. Slowly repressurize the dryer. Energize the Dryer On-Off switch located on the enclosure door (Power-on light should illuminate only when the compressor is running).

A.2.2 Desiccant Dryer Shutdown

WARNING:

To protect the lives of patients, always notify the appropriate medical facility staff before shutting down the Dryer. Instrument Air levels may be affected during this shutdown procedure.

To shut down the Dryer, de-energize using the On-Off switch (Power-on light extinguished). **Unit will remain pressurized.** To depressurize the unit, close the manual block valve on the Dryer discharge line. Open the sample valve between the Dryer discharge and manual block valve, allow unit to depressurize. Pressure gauges on both Towers will read (0) psig when completely depressurized. Close sample valve and open block valve prior to repressurizing the Dryer.

A.3 Dryer Maintenance

WARNING:

Ensure that the dryer and associated pre-filter(s) and after-filters(s) are valve isolated and fully depressurized before attempting to remove or disassemble any subassemblies or components. Failure to do so may result in serious personal injury and/or equipment damage.

WARNING:

Used desiccant material must be handled with special care. Desiccant is an adsorbent material. Used desiccant may contain chemicals and /or gases that are hazardous, toxic and /or flammable. It is recommended that all used desiccant be analyzed to determine content before disposal. Exercise proper care and procedures during handling and storage of used materials. All containers must be properly labeled and disposed of in accordance with local, state and federal regulations.

NOTE: The use of the correct replacement desiccant is necessary for proper drying operation. Never use hydroscopic salts of the type commonly used in “deliquescent” type dryers.

Frequency of Desiccant Replacement – Desiccant should be replaced whenever the required dew point cannot be maintained while the dryer is being operated within its designed conditions and there are no mechanical malfunctions.

Procedure for Desiccant Replacement

1. Depressurize and de-energize the dryer.

2. Remove front panel from cabinet (See FIG A.3.1).

3. To replace spent desiccant, remove tubing from top and bottom of desiccant towers and unscrew strainer assembly.

Note: Be prepared to catch the desiccant being removed in a container. Desiccant will readily pour out when drain port is opened.

4. Allow the spent desiccant to drain from the tower.

5. Replace bottom strainer assemblies using Teflon tape sealant or equivalent.

Appendix A: Basemount Expandable

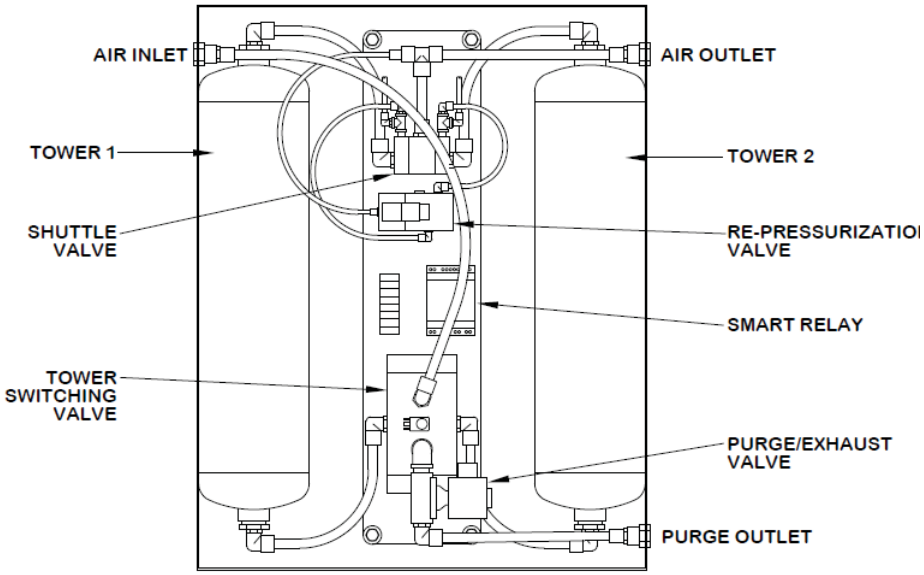

Fig. A.3.1 Desiccant Dryer Assembly

6. Fill the desiccant dryer towers as full as possible with dry desiccant.

7. Replace top strainer assemblies using Teflon tape sealant or equivalent.

8. Reinstall tubing to top and bottom of desiccant towers.

Ensuring Desiccant Dryness

1. Replacement desiccant is shipped in air tight containers. Keep containers closed until use to avoid moisture contamination. If desiccant is exposed to air it can be heated in an oven at 400°F for four hours before use, or the next procedure can be used.

2. If the dryer is not refilled with dry desiccant, it will be necessary to operate the dryer on 100% purge for approximately twenty-four hours to dry the desiccant.

Desiccant Requirements		
Hp (Model)	**Part No.**	**Pounds**
7.5 (DHW-20)	DES03-001	28
10 (DHW-25)	DES03-001	39

A.4 Systems Specifications

Model	7.5 Hp (DHW-20)	10 Hp (DHW-25)
Type	Desiccant Heatless	Desiccant Heatless
Design Pressure	250 psig	250 psig
Operating Pressure	200 psig Min. 250 psig Max.	200 psig Min. 250 psig Max.
Max. Inlet Air Temperature	120° F (49° C)	120° F (49° C)
Pressure Dew Point Capability @ 220 PSIG	-40° F (-40° C)	-40° F (-40° C)
Inlet Flow	31 SCFM	39 SCFM
Max. Purge Flow	8.4 SCFM	10.5 SCFM
Desiccant	Activated Alumina	Activated Alumina
Control	Smart Relay	Smart Relay
Power	24 VDC	24 VDC
Weight (lbs)	171	196

Appendix A: Basemount Expandable

A.5 System Cycle Time

4 MINUTE CYCLE				
Inlet Switching Valve	**Open to Tower 1**		**Open to Tower 2**	
Purge/Exhaust Valve N.C.	Open	Closed	Open	Closed
Repressurization Valve N.C.	Closed	Open	Closed	Open
Minutes	0 1	2	3	4

A.6 Trouble Shooting

Problem	Possible Causes	Solution
Dryer not cycling	Main power disconnected	Turn on main power
	Dryer power switch off	Turn on power switch
	Power failure	Restore power
	Main fuse blown	Replace fuse
	Fuse blown in control circuit	Replace fuse
	Solenoid valve failure	Check and replace or repair solenoid valve
	Smart Relay failure	Check and replace if defective
	Loose or faulty connection	Check & tighten all wire connections
Dew point degradation	Incorrect purge gas flow	Check purge orifice for blockage. Clean or replace as required
	Inlet gas temperature to high	Check compressor aftercooler
	Liquid entering the dryer inlet	Inspect pre-filter cartridges. Replace if necessary Inspect Zero-loss drain valves. Replace if necessary
	Purge exhaust muffler restricted	Replace muffler
	Desiccant is contaminated	Shutdown and depressurize the dryer. Inspect the desiccant and replace if fouled. Inspect prefilters if fouling is noted.
	Piping component leaks at dryer outlet or downstream of dryer outlet	Soap buble test the dryer outlet and downstream piping. Repair all leaks noted
Backpressure on a desiccant chamber during regeneration cycle	Dirty or fouled muffler	Switch off power, remove purge muffler and clean or replace.

Appendix B: Oil Indicator

B.1 General Information

CAUTION: This manual is designed to serve as the operation and maintenance guide for your Oil Entrainment Indicator. The contents of this manual should be carefully read BEFORE attempting any phase of operation or maintenance. Failure to follow the operating and maintenance procedures of the instruction manual could result in personal injury or property damage.

All information, specifications and illustrations within this manual are those in effect at the time of printing. The manufacturer reserves the right to change or make improvements without notice and without incurring any obligation to make changes or add improvements tp products previously sold.

To facilitate maintenance, recommended spare parts for Oil Indicator are available. Failure to maintain recommended spare parts might result in expensive and unnecessary downtime for which the manufacturer cannot be responsible. To request a quotation of, or place an order for, recommended or emergency spare parts, please contact **BeaconMedæs Technical Services** department at 1-888-4MEDGAS (888-463-3427).

B.2 Function

The Oil Indicator is a calibrated measuring instrument used to detect aerosol mist levels of oil entrainment that may be present in the instrument air system. Sensitivity of the indicator is limited only by the total number of hours it is allowed to remain on the air supply system. The indicator is sensitive enough to measure a concentration of oil entrainment as low as .01 PPM (.012mg/m3) in a compressed air system. It can be used in systems with line pressures between 10 and 125 PSIG (70 and 875 kPa). Inline pressure regulator for oil indicator factory set at 50 PSIG. NFPA requires a 0.05ppm ±0.03ppm reading or better in the air stream.

WARNING:

If the pressure exceeds 125 PSIG or the retaining nut is loosened, the oil indicator tube could blow out of the compression fitting, creating a hazardous condition.

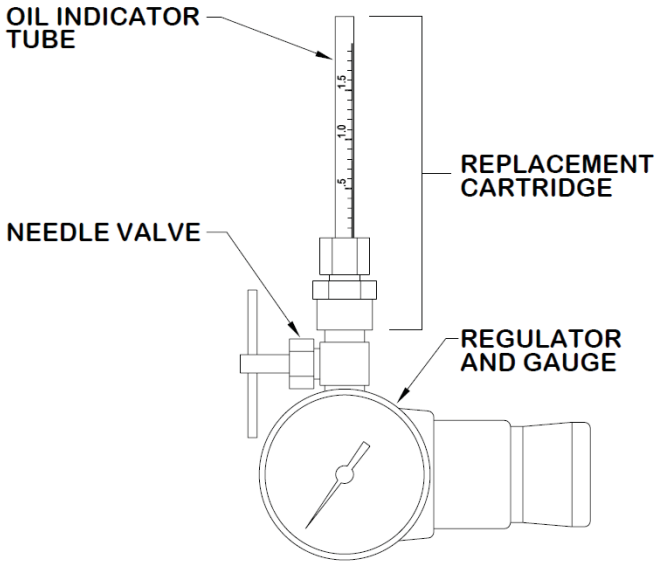

Fig. B-1. Oil Indicator Assembly

B.3 Operation

When the needle valve of the oil indicator is open, filtered instrument air will flow through the calibrated plastic tube. Any oil present in the air will then carry a red oil soluble dye up the tube, coloring a white material in the tube. The rate of color travel will be proportional to the amount of oil present. The parts per million (ppm) value of oil entrained in the air can be determined using the conversion chart below (Fig. B-2). After use the needle valve should be closed and left in line and the cartridge removed. At the time of the next test, a replacement cartridge will need to be installed on the needle valve fitting.

Appendix B: Oil Indicator

B.4 Oil Indicator Replacement Cartridge

NOTE: The oil indicator tube must be replaced with a new cartridge after each test

1. Before removing cartridge close the needle valve and leave the valve in place.

2. Remove the old cartridge by unscrewing the fitting holding the indicator tube. The new cartridge comes with a new fitting with the tube installed.

3. Install the new cartridge on the needle valve and only open the valve when a new test begins.

WARNING:

Do not disturb the factory adjusted torque on the retaining nut that holds the indicator plastic tube in place. Tampering with the nut can cause serious personal injury or property damage.

B.5 Oil Indicator Replacement Cartridge

HP	Part No.	Qty Required
7.5	GAG08-002	2
10	GAG08-002	2

B.6 Reading and Measurements

1. Before taking a measurement, fill out the record tag furnished with the oil indicator. Record the line pressure.

2. Fully rotate the needle valve handle counterclockwise to open and record the time start time. Slide the record tag over the oil indicator to avoid misplacing it.

3. When checking for oil entrainment, visually inspect the oil indicator after 40 hours and measure only to the top of the dark red column, not light pink area if present. If dark red column is not visible, discontinue test, there is no measurable amount of oil present in the air stream.

4. If dark red column is visible, record the actual time and unit mark on the indicator and close the needle valve.

B.7 Oil Concentration Determination

1. To find the Rate of Color travel, divide the units traveled by the total number of hours.

2. Using the chart in Fig B-2, find the Rate of Color travel on the left side of the chart and the pressure on the bottom. The point where Rate and Pressure intersect is the parts per million (ppm) of oil concentration.

Appendix B: Oil Indicator

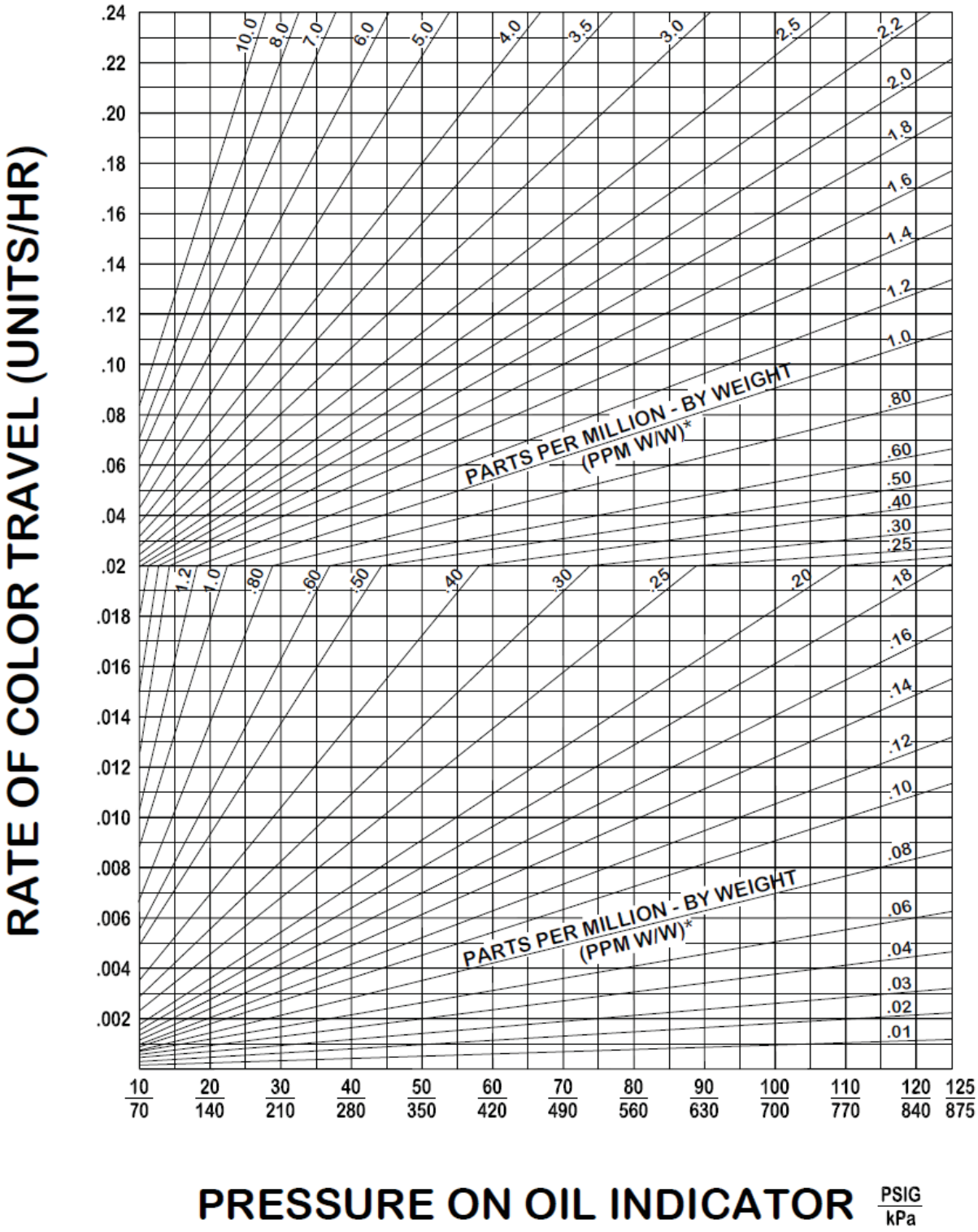

Fig. B-2. Conversion Chart for Oil Indication

Appendix C: Dew Point Transmitter

C.1 General Information

CAUTION: This appendix is designed to serve as the operation and maintenance guide for your Dew Point Transmitter. The contents of this appendix should be carefully read BEFORE attempting any phase of operation or maintenance. Failure to follow the operating and maintenance procedures provided herein could result in personal injury or property damage.

WARNING:

Before starting any installation, maintenance or service procedure, disconnect ALL power to the system to prevent electrical shock.

Before making or breaking any medical gas line connections, make sure the system is depressurized in order to avoid personal injury.

Before removing the dew point transmitter, verify that the source of line pressure has been closed and the line pressure reduced to atmospheric pressure.

An alarm condition on dew point indicates a dew point level exceeding the maximum set point, or a faulty dew point transmitter. Immediate action should be taken to reduce the possibility of high dew point in the Instrument Air line.

If the dew point transmitter flowmeter becomes clogged, dew point readings may be inaccurate, allowing moisture to accumulate undetected.

C.2 Introduction

The dew point transmitter is a continuous, on-line instrument that measures the absolute moisture content in the final product line. The transmitter measures dew point with excellent long term stability. The DRYCAP® polymer sensor is durable and has been designed for harsh environments. The pressure setting is preset at the factory prior to shipment.

C.3 Specifications

1. Dew point Temperature: -60° to 60°C (-112°to 68°F)
2. Operating Temperature: 0° to 60°C (32° to 140°F
3. Dew point accuracy: ±2°C (±4°F)
4. Air Consumption: 0.75 LPM (1.6 SCFH)
5. Pressure: 0 to 20 bar (0 to 290 psi)

C.3.1 Output

1. Analog output: 4 - 20 mA.
2. Resolution for analog output: ±.002 mA

C.3.2 General

1. Operation Voltage: 17 - 35 VDC
2. Power consumption (24 VDC): max 220 mA.
3. Probe material: Stainless Steel (AISI 316L)
4. Sensor protection: Stainless Steel Sintered Filter

C.4 Operation

Although the correct operation of the transmitter is not sample flow dependent, it is important that flow velocity through the sample source to the sample block is high enough to avoid long lead time lags in response to changes in moisture at the sample source. A flowmeter has been installed to ensure proper flow velocity. This flowmeter should be checked occasionally to see if it has any blockages.

Appendix C: Dew Point Transmitter

C.5 Alarms

Dew points that exceed set points shall cause an alarm condition at the PLC. When the dew point exceeds the alarm set point, the PLC contacts are de-energized. The alarm remains de-energized until the alarm condition is cleared by the operator.

WARNING:

Respond to alarm conditions immediately. An alarm condition on the dew point indicates a dew point level exceeding the maximum set point. Immediate action to correct the problem should be taken. Prolonged exposure to condensing moisture can damage the Instrument Air equipment.

C.6 Maintenance

C.6.1 Repair Policy

Do not use a unit that is not functioning properly until all necessary repairs have been made and the unit has been tested to determine that it is functioning in accordance with the manufacturer's published specifications. Contact the **BeaconMedæs Technical Services** department at 1-888-4MEDGAS (888-463-3427) for assistance.

Note: To ensure full reliability, have all maintenance and testing done by a qualified technician. If this cannot be done, maintenance and testing of those parts discussed in this appendix may be undertaken by a competent, trained individual having experience in the repair of devices of this nature.

WARNING:

Electrical Shock Hazard

No repair should ever be attempted by anyone not having experience in the repair of devices of this nature. Failure to follow proper repair procedures can result in serious injury.

CAUTION: No maintenance and testing should ever be undertaken or attempted by anyone not having general experience in the repair of devices of this nature. Also, to avoid damaging the unit or any of its components, no maintenance and testing should be undertaken by qualified individuals who are not familiar with the procedures in this manual.

Replace damaged parts with components from BeaconMedæs. Test the unit after installation of replacement parts to make certain that it complies with the published specifications.

C.6.2 Maintenance Schedule

Maintenance	Frequency	Action
Check flow through flowmeter	Every 6 months	Check for proper flow
Check transmitter accuracy	Every 12 months	Verify dew point sensor accuracy (contact **BeaconMedæs**)
Recalibration	Every 2 years	See Section C.8
Replace Sensor	Every 5 years	See Section C.9

Appendix C: Dew Point Transmitter

C.7 Troubleshooting

WARNING:

Before removing the dew point transmitter, verify that line pressure has been valved off or reduced to atmospheric pressure.

Before servicing the dew point transmitter:

1. Close dew point transmitter isolation valve
2. Allow transmitter piping to depressurize through the flowmeter until it reduces to atmospheric pressure.
3. Disconnect sensor cable and remove transmitter from piping.

Note: Remote alarms will be activated

Problem	Possible Cause	Solution
Slow system response	Insufficient flow through dew point sensor	Check flow
No power	No incoming power	Verify line power is being supplied
Erratic Display	Unit defect	Contact **BeaconMedæs**
High dew point	Air is not being dried	Verify that the dryer is not being bypassed
High dew point	Faulty sensor	Replace sensor

C.8 Dew Point Sensor Calibration

The dew point sensor is shipped to you pre-calibrated, no user calibration is required. The dew point sensor will self calibrate periodically, or after a severe humidity change. During the dew point sensor auto-calibration, the dew point reading will remain constant on the display until the calibration is complete. The auto calibration process will take 2-3 minutes. Check the accuracy of the sensor every 12 months. The sensor requires external calibration every 2 years. Contact BeaconMedæs to check accuracy and/or external calibration of the sensor.

C.9 Dew Point Sensor Replacement

Check the response time of the sensor by removing it from the sensor chamber and covering the probe with your hand. The dew point reading should rise rapidly. If the dew point does not rise or is slow to respond, it is time to replace the sensor. To replace, disconnect the power to the instrument, unplug and remove the sensor from the dew point sensor chamber, replace sensor and reassemble. (See FIG. C-1)

Dew Point Sensor		
Hp	**Part No.**	**Qty Required**
7.5	SSR01-008	1
10	SSR01-008	1

Appendix C: Dew Point Transmitter

Fig. C-1 Dew Point Transmitter Assembly

Appendix D: Backup Air Cylinder Manifold

WARNING:

Before starting any installation, maintenance or service procedure, disconnect ALL power to the system to prevent electrical shock. Verify that source line for high pressure air has been closed and the line pressure is reduced to atmospheric pressure. Failure to do so can cause serious personal injury or property damage.

D.1 Precautions

1. **Tampering with gas specific connections is prohibited. Do not alter, remove or modify gas specific connections.**

2. Before connecting cylinder to manifold, momentarily open and close cylinder to blow out dirt and debris.

3. After connecting cylinder to manifold, open cylinder s-l-o-w-l-y to allow pressurization of the backup manifold, then check for leaks at all connection points.

4. Always secure high-pressure cylinders with racks, straps or chains. Unrestrained cylinders may fall over and damage or break off cylinder valve.

5. Do not bend flexible pigtails into a radius smaller than 3”.

D.2 Introduction

The backup air cylinder manifold assembly accommodates multiple high pressure air cylinders with an uninterrupted, reliable supply of instrument air whenever activated. The assembly includes a high pressure modular header assembly with gas specific pigtail-to-header check valves to permit changing of air cylinders without gas leakage. A pressure switch is provided to signal the master gas alarm system when reserve supply is reduced below the factory suggested minimum pressure. The factory set line regulator controls the outlet pressure from the cylinders to the hospital instrument air lines. A master shutoff valve is supplied to isolate the backup header during service and repairs.

D.3 Pigtail/Cylinder Connection

All Backup Instrument Air headers utilize 24” long flexible stainless-steel braided lines. Each pigtail assembly is shipped in sealed bags and the Instrument Air header connections are capped.

NOTE: Both ends of the flexible pigtails are the same. Either end may be connected to manifold header.

1. Remove plastic shipping caps from manifold header connections.

2. Connect one end of the pigtail assembly to the manifold.

3. Position air cylinders (supplied by customer) below header assembly and secure each cylinder to the equipment frame with the chains supplied.

4. Connect pigtails to each cylinder.

5. Tighten all pigtail connections firmly. Do not over-tighten.

WARNING:

Do not use thread sealant on header or pigtail connections. Prior to connecting pigtails to cylinders, slightly open and close each cylinder valve to blow out dirt and debris.

Appendix D: Backup Air Cylinder Manifold

WARNING:

To adjust Low Pressure Switch the disconnect switches in the control panel must be "ON" to power the HMI and Pressure Switch when making adjustments. Electrical power to the switch must be "OFF" if the Pressure Switch is being replaced. Care must be taken to avoid personal injury or damage to the equipment.

D.4 Reserve Low Pressure Switch Adjustment

The "Reserve Low Pressure Switch", is normally open and closes when pressure in excess of the switch setting is applied. The switch should always be adjusted as pressure decreases. If the pressure switch can not be set, the switch must be replaced. Pressure switches are not repairable. The pressure switch is factory set at 1500 PSI (±25 PSI).

If switch adjustment is necessary, slide collar of switch towards wires to access the internal adjusting barrel. Insert the tip of a small screwdriver into adjusting barrel and rotate barrel (See Fig D-1)

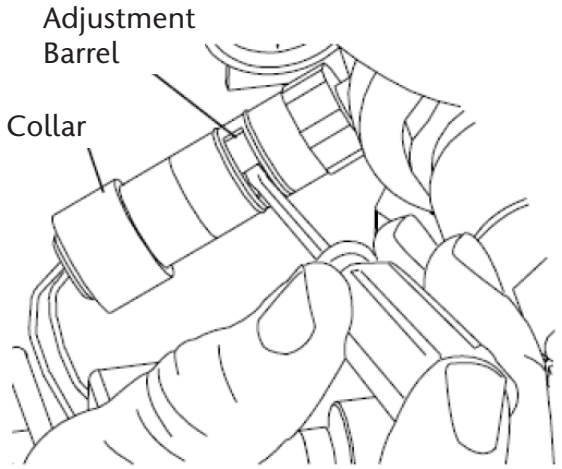

Fig D-1. Reserve Low Pressure Switch Adjustment

NOTE: When viewing the switch from the wire end, rotating barrel clockwise will raise switch pressure. Counterclockwise rotation will lower switch pressure. Make small adjustments and retest as follows:

1. Slowly open one high pressure cylinder to pressurize manifold header.
2. After pressurizing the header close the air cylinder valve and slightly open the vent valve located on the back of the regulator (Fig. D-2) and allow a small flow of air through the regulator and valve.
3. Observe the pressure gauge on the upstream side of the regulator and note the pressure reading when switch changes state (contacts open). Low Reserve Pressure indicating light on the HMI display will flash red and horn will sound. (See System operation Section 3.6.8)
4. Adjust switch settings as necessary and repeat process until the pressure switch has been set within acceptable limits.
5. Close regulator vent valve after switch has been set.
6. Slide the pressure switch collar back to its original position.

Appendix D: Backup Air Cylinder Manifold

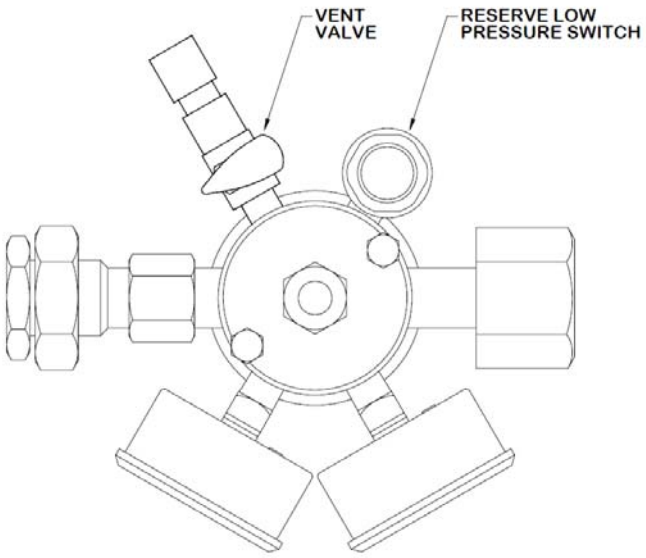

Fig D-2. Reserve Header Regulator, Vent Valve and Reserve Low Pressure Switch

D.4.1 Adjustment when system is NOT running and power to unit is "OFF"

The Reserve Header regulator is factory set at 180 PSI. The following procedure should only be performed if the regulator is not set within acceptable limits.

1. Close both manual block valves before final filter/regulator piping.

2. Slowly open one high pressure cylinder to pressurize manifold header and filter/regulator piping.

3. After pressurizing the piping, slightly open the vent valve located on the back of the regulator (Fig. D-2) and allow a small flow of air through the header.

4. Observe the pressure gauge on the down stream side of the regulator and adjust the output pressure of the regulator using a 6mm Allen wrench to within an acceptable limit.

5. Close valve on air cylinder and bleed pressure from piping using the vent valve.

6. Open one manual block valve that corresponds to the open manual block valve downstream of the filter/regulators.

7. **Close** vent valve on reserve header regulator.

D.4.2 Adjustment when System is RUNNING.

The Reserve Header regulator is factory set at 180 PSI. The following procedure should only be performed if the regulator is not set within acceptable limits.

1. Verify air cylinder valves are open.

2. Slightly open the vent valve located on the back of the regulator (Fig. D-2) and allow a small flow of air through the header.

3. Observe the pressure gauge on the down stream side of the regulator and adjust the output pressure of the regulator using a 6mm Allen wrench to within an acceptable limit.

4. **Close** vent valve on reserve header regulator.

Appendix D: Backup Air Cylinder Manifold

D.5 Air Cylinder Backup Manifold Assembly Replacement Parts

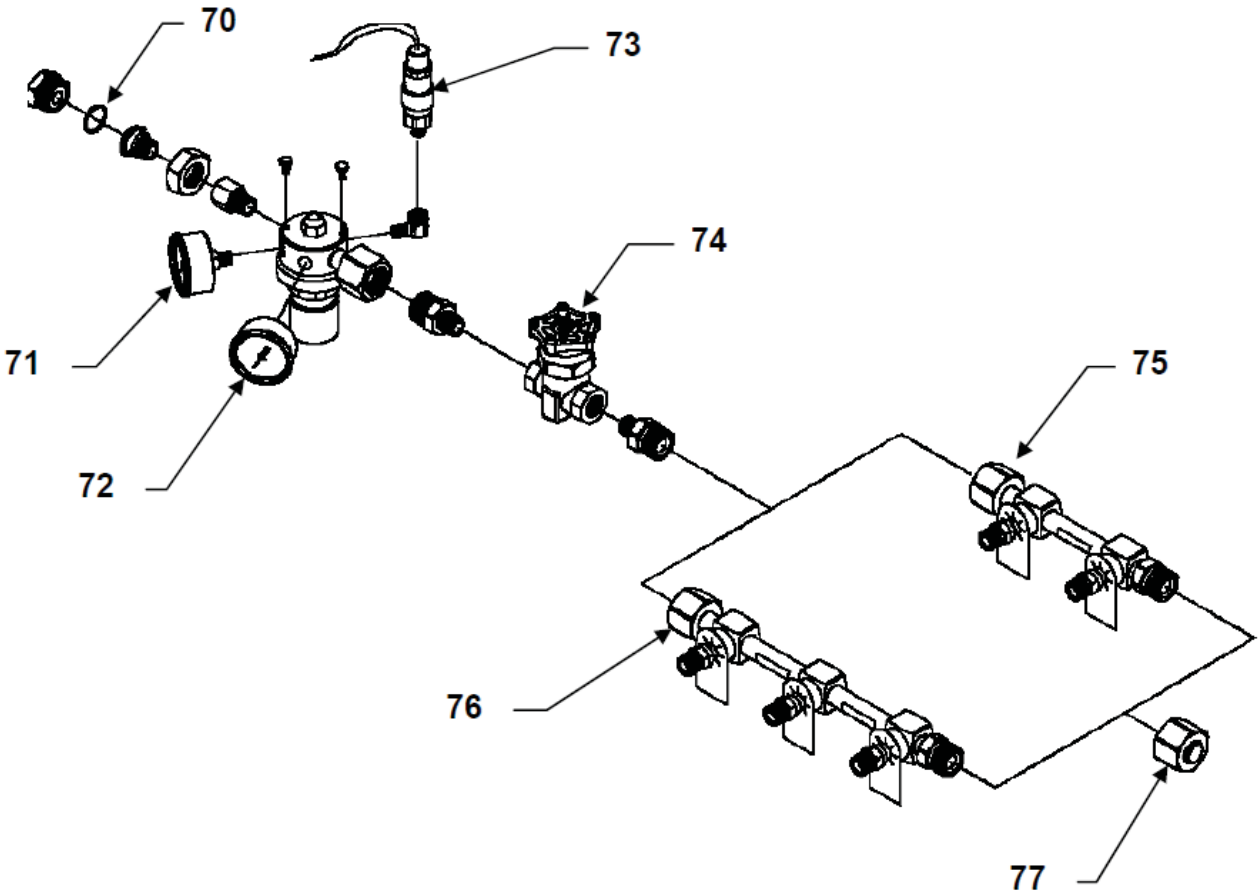

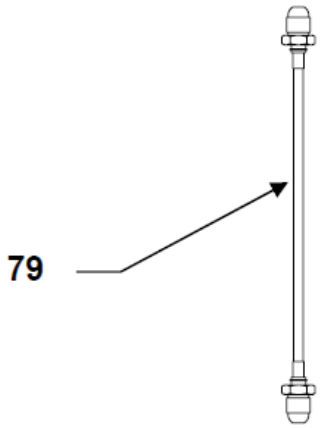

Appendix D: Backup Air Cylinder Manifold

D.5.1 5-Cylinder Backup Manifold Assembly

Ref	Part No.	Description	Qty/Unit
70	622611-00	O-Ring, zero clearance fitting	1
71	130116-00	Pressure gauge, 300 psi	1
72	130117-00	Pressure gauge, 3000 psi	1
73	868009-00	Pressure switch, set @ 1500 psi	1
74	120005-00	Master shutoff valve	1
75	136002-12	Header manifold, 2-inlet, air	1
76	136003-12	Header manifold, 3-inlet, air	1
77	515763-00	Header nut and plug assembly	1
79	290812-24	Pigtail, flex, air, 24”, CGA-346	5

D.5.2 7-Cylinder Backup Manifold Assembly

Ref	Part No.	Description	Qty/Unit
70	622611-00	O-Ring, zero clearance fitting	1
71	130116-00	Pressure gauge, 300 psi	1
72	130117-00	Pressure gauge, 3000 psi	1
73	868009-00	Pressure switch, set @ 1500 psi	1
74	120005-00	Master shutoff valve	1
75	136002-12	Header manifold, 2-inlet, air	2
76	136003-12	Header manifold, 3-inlet, air	1
77	515763-00	Header nut and plug assembly	1
79	290812-24	Pigtail, flex, air, 24”, CGA-346	7

Appendix E: HMI Controller

E.1 HMI System Controller (Human Machine Interface) Front Panel

The Instrument Air System shall have an HMI touch screen controller to control and monitor the complete system operation as well as record service and alarm history of the unit.

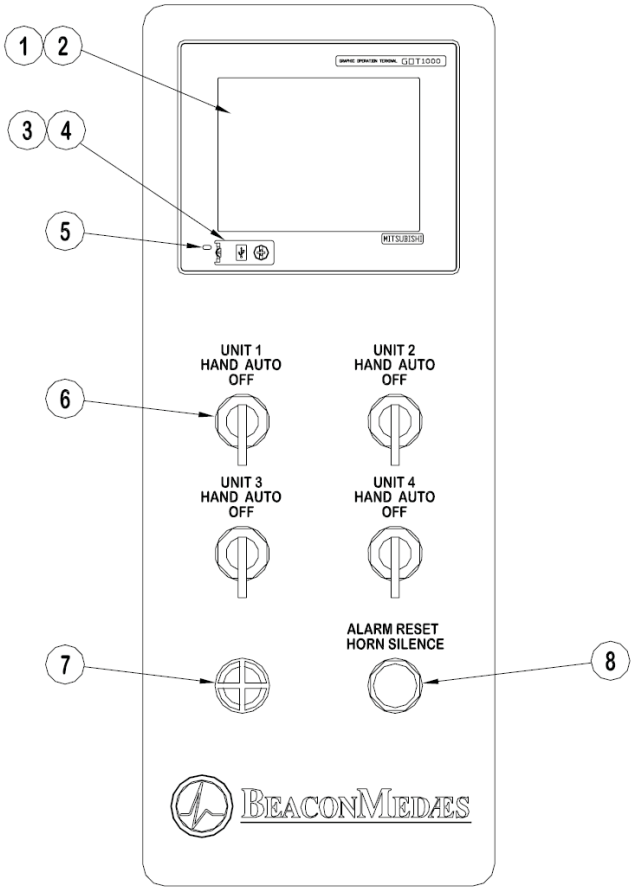

Fig E-1. Front Panel

1. Display Screen – Displays the systems operating screens.

2. Touch Key – For operating the touch switches in the display screen.

3. USB Interface – USB Interface for connecting a personal computer.

4. USB Environmental protection cover – Opens/ Closes when USB interface is used.

5. Power LED –
   Lit in green: Power is correctly supplied
   Lit in orange: Screen Saver
   Blinking in orange/green : Blown backlight bulb
   Not lighted indicator: Power is not supplied

6. HOA selector switch – Compressor module control switch, Hand – Off – Auto.

7. Alarm horn – Sounds when an alarm condition occurs.

8. Alarm Reset/horn Silence – Button to silence alarm and reset visual alarm on HMI screen after alarm condition is corrected.

E.2 HMI Main Display Screen

E.2.1 Multiplex Systems

The main screen for Multiplex Systems will monitor and display the systems dew point reading, air receiver pressure, individual unit total run hours and run status (HOA switch position). Included on this screen is a service due alarm, transducer fault alarm and lag alarm for the system as well as individual alarms for each compressor unit (motor overload, high discharge air temperature and failed start alarms).

The “MENU” button in the upper left corner will allow the operator to navigate through the screens to view the system alarm history, service schedule and records, dew point and pressure trends, basic troubleshooting and system general information. When the HMI is powered up the main control window will appear on the display screen (See Fig E-2.).

This touch screen displays the systems current dew point reading, pressure, total hours run for each module, HOA switch setting and status of service schedule and alarm conditions.

Appendix E: HMI Controller

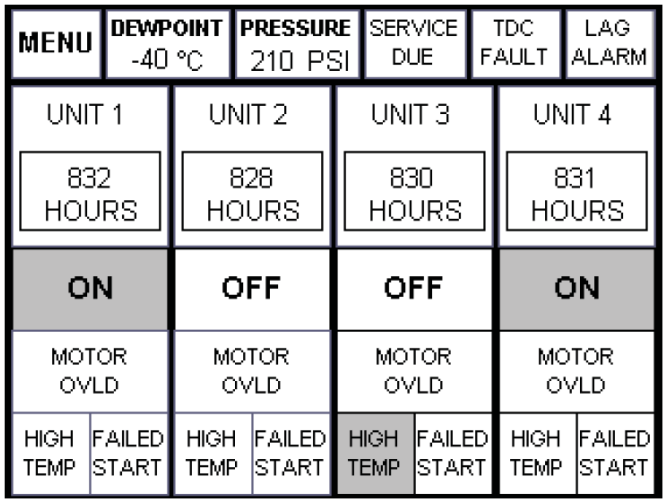

Fig E-2. Main Panel Screen (Quadruplex System shown)

1. "MENU" Button: Displays menu screen which allows the operator to access the systems operating history, service requirements, dewpoint and pressure trends, troubleshooting info and main system info. See E.3.1 for full description of these functions.

2. "DEWPOINT" Indicator: Display's the current dewpoint reading at the units discharge point. If the dewpoint reading is higher than -30°C, a high dewpoint alarm will occur. The Dewpoint Indicator will flash red and the horn will sound. Pressing the reset button on the face of the control panel will silence the alarm. Selecting the indicator when flashing red will open a trouble shooting window. The dewpoint indicator will continue to flash red until the dewpoint falls below -30°C. At this point the dewpoint alarm will reset.

3. "PRESSURE" Indicator: Display's the current pressure inside the air receiver.

4. "SERVICE DUE" button: Service intervals and types of service are preprogrammed into the HMI. The button will flash yellow when service is due. Pressing the "service due" button when flashing will display the service schedule screen (Fig E-7.). See E.3.4 for full description of these functions.

5. "TDC FAULT" Indicator: Indicator will flash red and horn will sound if the transducer fails. Pressure reading on the display screen will default to "0" psi. Selecting the indicator when flashing red will open a trouble shooting window.

6. "LAG ALARM" Indicator: Indicator will flash red and horn will sound when last available compressor unit comes on. Press the reset button to silence the alarm. If the condition is corrected both the alarm and indicator will turn off. If a lag condition remains the indicating light on the HMI will remain on. Selecting the indicator when flashing red will open a trouble shooting window. Once the lag condition is corrected, press the reset button again to turn off alarm light.

7. "UNIT RUN HOURS" Displays total run hours for each compressor module.

8. "HAND-OFF-AUTO" Displays status of each compressor module. The green "ON" displays when the compressor is running and the HOA selector switch is in the AUTO or HAND setting. The yellow "AUTO" displays when the compressor is not running and the HOA selector switch is in the AUTO position. The "OFF" indicator is displayed when the HOA selector switch is in the "OFF" position. The yellow "HAND" displays when the HOA selector switch is in the HAND position.

9. "MOTOR OVLD" Indicator: Display will flash red and sound an alarm when overload switch is tripped in the control panel. The compressor in question will not re-start until the reset button on the starter inside the main control cabinet is reset (See "Motor overheating" in the Troubleshooting Section 4.0). Press the reset button on front panel to silence the alarm. Selecting the indicator when flashing red will open a trouble shooting window. The indicator on the HMI will remain on until motor starter is reset.

Appendix E: HMI Controller

10. "HIGH TEMP" Indicator: Display will flash red and sound an alarm when the compressor unit is shut down due to high discharge air temperatures. Press the reset button on the front panel to clear the alarm. If the indicator light stays "ON", the high temp condition still exists. Selecting the indicator when flashing red will open a trouble shooting window. The unit may not restart after pressing the reset button, depending on the system sequencing and system pressure.

11. "FAILED START" Indicator: Display will flash red if the compressor module failed to start/ run when signaled to start. This alarm will also activate when a Motor Overload Shutdown occurs. Press the reset button on the front panel to silence the alarm (see "Failure to start" in the Troubleshooting Section 4.0). Selecting the indicator when flashing red will open a trouble shooting window. The indicator light on the HMI will remain on until the problem has been resolved and the reset button pushed again.

E.2.2 Simplex Systems

The main screen for Simplex Systems will monitor and display the systems dew point reading, air receiver pressure, total run hours and run status (HOA switch position). Included on this screen is a service due alarm, and transducer fault alarm for the system as well as alarms for motor overload, high discharge air temperature, failed start alarms, reserve header in use and reserve header low pressure. The "MENU" button in the upper left corner will allow the operator to navigate through the screens to view the system alarm history, service schedule and records, dew point and pressure trends, basic troubleshooting and system general information. When the HMI is powered up the main control window will appear on the display screen (See Fig E-3.).This touch screen displays the systems current dew point reading, pressure, total hours run, HOA switch setting and status of service schedule and alarm conditions.

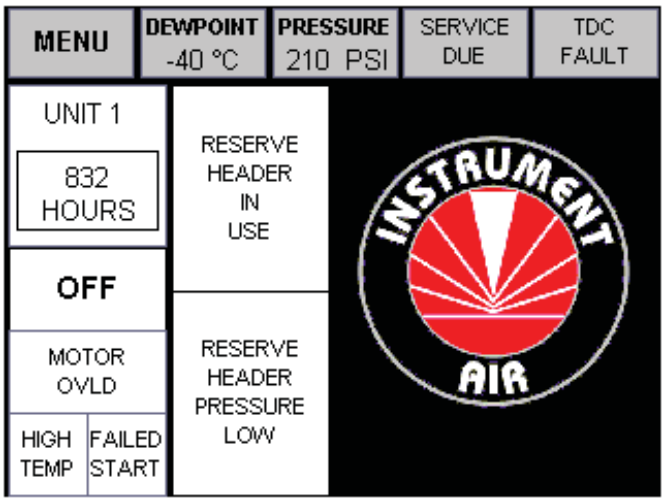

Fig E-3. Main Panel Screen (Simplex System Shown)

1. "MENU" Button: Displays menu screen which allows the operator to access the systems operating history, service requirements, dewpoint and pressure trends, troubleshooting info and main system info. See E.3.1 for full description of these functions.

2. "DEWPOINT" Indicator: Display's the current dewpoint reading at the units discharge point. If the dewpoint reading is higher than -30°C, a high dewpoint alarm will occur. The Dewpoint indicator will flash red and the horn will sound. Pressing the reset button on the face of the control panel will silence the alarm. Selecting the indicator when flashing red will open a trouble shooting window. The dewpoint indicator will continue to flash red until the dewpoint falls below -30°C. At this point the dewpoint alarm will reset.

3. "PRESSURE" Indicator: Display's the current pressure inside the air receiver.

4. "SERVICE DUE" Button: Service intervals and types of service are preprogrammed into the HMI. The button will flash yellow when service is due. Pressing the "service due" button when flashing will display the service schedule screen (Fig E-7.). See E.3.4 for full description of these functions.

Appendix E: HMI Controller

5. "TDC FAULT" Indicator: Indicator will flash red and horn will sound if the transducer fails. Pressure reading on the display screen will default to "0" psi. Selecting the indicator when flashing red will open a trouble shooting window.

6. "UNIT RUN HOURS" Displays total run hours for each compressor module.

7. "HAND-OFF-AUTO" Displays status of each compressor module. The green "ON" displays when the compressor is running and the HOA selector switch is in the AUTO or HAND setting. The yellow "AUTO" displays when the compressor is not running and the HOA selector switch is in the AUTO position. The "OFF" button is displayed when the HOA selector switch is in the "OFF" position. The yellow "HAND" displays when the HOA selector switch is in the HAND position.

8. "MOTOR OVLD" Indicator: Display will flash red and sound an alarm when overload switch is tripped in the control panel. The compressor in question will not re-start until the reset button on the starter inside the main control cabinet is reset (See "Motor overheating" in the Troubleshooting Section 4.0). Press the reset button on front panel to silence the alarm. Selecting the indicator when flashing red will open a trouble shooting window. The indicator on the HMI will remain on until motor starter is reset.

9. "HIGH TEMP" Indicator: Display will flash red and sound an alarm when the compressor unit is shut down due to high discharge air temperatures. Press the reset button on the front panel to clear the alarm.

   If the indicator light stays "ON", the high temp condition still exists. Selecting the indicator when flashing red will open a trouble shooting window. The unit may not restart after pressing the reset button, depending on the system sequencing and system pressure.

10. "FAILED START" Indicator: Display will flash red if the compressor module failed to start/run when signaled to start. This alarm will activate also when a Motor Overload Shutdown occurs. Press the reset button on the front panel to silence the alarm (see "Failure to start" in the Troubleshooting Section 4.0). Selecting the indicator when flashing red will open a trouble shooting window. The indicator light on the HMI will remain on until the problem has been resolved and the reset button pushed again.

11. "RESERVE HEADER IN USE" Indicator: Display will flash red when receiver air pressure falls below 180 psi and air from the backup cylinders is in use to maintain the minimum discharge pressure of 180 psi. Press the reset button on the front panel to silence alarm. Selecting the indicator when flashing red will open a trouble shooting window. The indicator light on the HMI will remain on until the problem has been resolved and the reset button pushed again.

12. "RESERVE HEADER PRESSURE LOW" Indicator: Display will flash when the air bottle backup system pressure falls below 1500 psi. Press the reset button on the front panel to silence alarm. Selecting the indicator when flashing red will open a trouble shooting window. The indicator light on the HMI will remain on until the problem has been resolved and the reset button pushed again.

Appendix E: HMI Controller

E.3 CONTROL BUTTONS

E.3.1 "MENU" Button

The "MENU" button in the upper left corner (Fig E-2.) on the main screen when selected will display the "MENU SCREEN" window that will allow the operator to access information about the units' history, service requirements, dewpoint and pressure trends, troubleshooting help and system information (Fig E-4.) Each button will be explained in detail in this section.

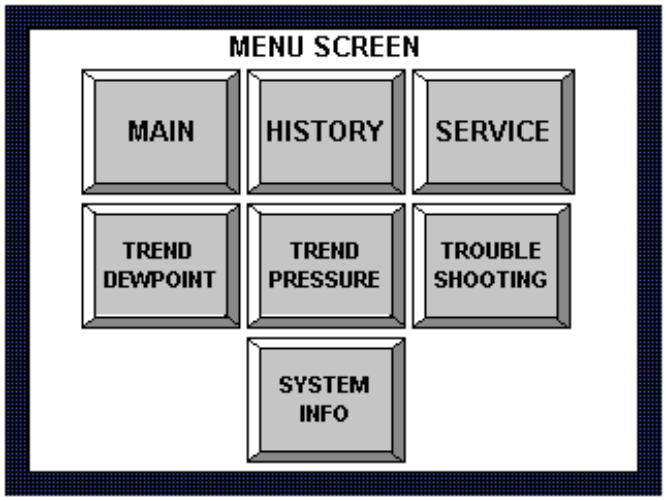

Fig E-4. Menu Screen

E.3.2 "MAIN" Button

The main button can be found on many of the screens within the HMI Controller. At any time when the "MAIN" button is selected, the HMI display will return to the Main Display Screen (Fig E-2).

E.3.3 "HISTORY" Button

The "HISTORY" button (Fig E-4) will open a new window listing all the alarm conditions that have occurred as well as routine maintenance alerts (Fig E-5). The list will show the date and time of the incident, type of incident and when the condition was cleared/corrected. This creates a permanent record of the history of the unit and cannot be reset.

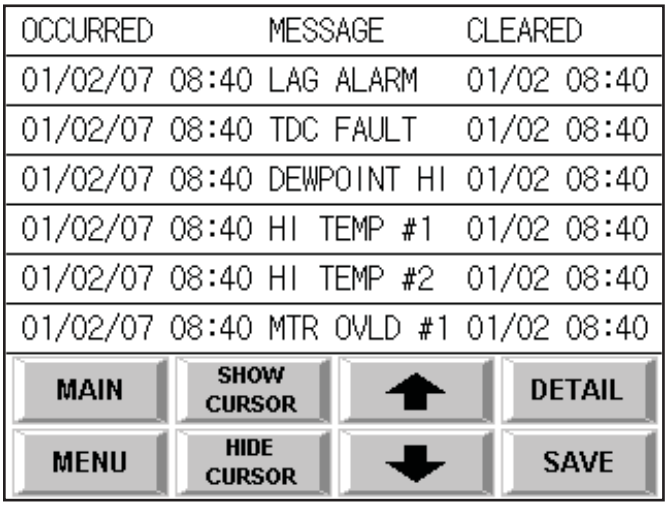

OCCURRED	MESSAGE	CLEARED
01/02/07 08:40	LAG ALARM	01/02 08:40
01/02/07 08:40	TDC FAULT	01/02 08:40
01/02/07 08:40	DEWPOINT HI	01/02 08:40
01/02/07 08:40	HI TEMP #1	01/02 08:40
01/02/07 08:40	HI TEMP #2	01/02 08:40
01/02/07 08:40	MTR OVLD #1	01/02 08:40

Fig E-5. History screen

1. "MAIN" button will return you to the main screen.
2. "MENU" button will return you to the Menu Screen.
3. "SHOW CURSOR" and "HIDE CURSOR" buttons will turn on and off the highlight feature used to select specific line items on the history screen.
4. The Up and Down arrows allows you to scroll through the history list.
5. "DETAILS" button will open another window which will give the operator more info about a specific occurrence. Service messages will display what actions need to be taken to service the unit. Alarm messages will list troubleshooting info to help resolve the alarm condition.
6. "SAVE" button will open a new window called Program/Data Control. From this screen you can save the Alarm History to a CF (Compact Flash) Card. See Section E.10 Writing Alarm History to CF Card for procedure.

Appendix E: HMI Controller

E.3.4 "SERVICE" Button

The "SERVICE" button (Fig E-4) will open a new screen that allows the operator to view the service schedule for the unit, get a list of standard service parts and view the service intervals for the unit (Fig E-6).

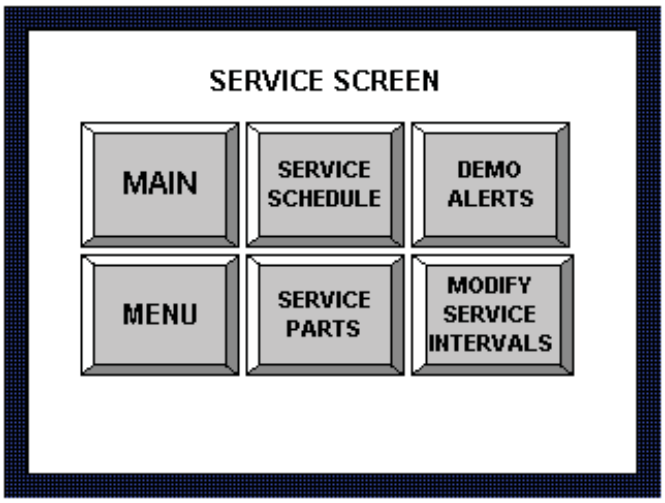

Fig E-6. Service Screen

1. "MAIN" button will return you to the main screen.

2. "MENU" button will return you to the Menu Screen.

3. "SERVICE SCHEDULE" button will display a new window listing the service items, when they are due to be serviced and the last time service was performed on that item (Fig E-7). The buttons shown at the bottom of the screen allows the operator to navigate between the individual compressor units (unit #1, unit #2) and the overall system service screen. The Log-in button is used to enter a password for access to the reset buttons.

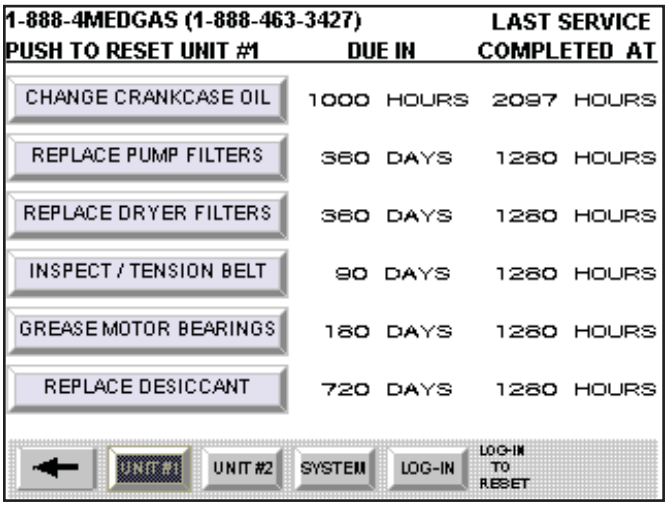

Fig E-7. Service Schedule Screen

4. Resetting "SERVICE SCHEDULE": (Note: before resetting service schedule, perform all the required service and maintenance as indicated by the "Service due" alarm.

5. The "SERVICE SCHEDULE" (Fig E-7) screen can be accessed from the main service screen or from the service due button on the main screen (if that button is flashing yellow).

6. Select "Log-in" button. Enter password "111" and select "enter".

7. Select "OK" in next screen. Display will default back to password screen, select "X" in upper right corner to close screen. Display will then default back to "Service Schedule" screen.

8. Select flashing yellow button to reset service item. A warning window will display asking if you're sure you want to reset the service schedule. Select "yes" and the service schedule for that item will be updated.

9. Repeat this process for all remaining service due conditions.

10. To return to the "Service Screen" (Fig E-6) touch the arrow in the lower left corner.

Appendix E: HMI Controller

E.3.5 "DEMO ALERTS" Button

The "DEMO ALERT" Button allows the operator to artificially create service alarm conditions. The on screen directions walk the operator through the process of clearing and resetting the alarm condition (Fig E-8). To return to the "Service Screen" touch the arrow in the lower left corner.

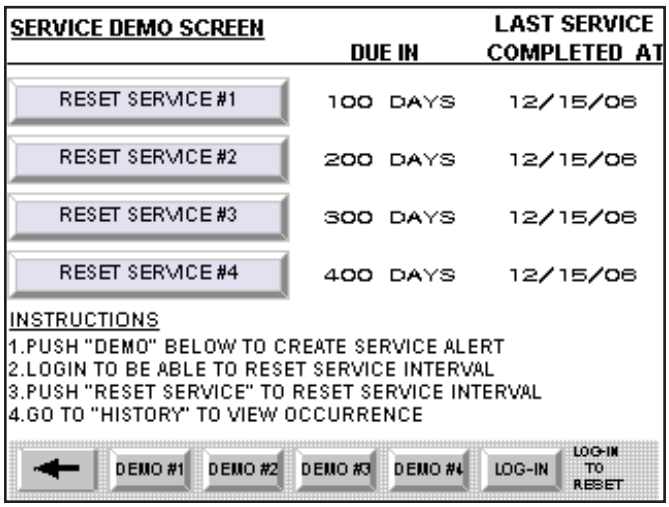

Fig E-8. Service Demo Screen

E.3.6 "SERVICE PARTS" Button

The "Service Parts" button will display a screen listing all the service parts that are part of the routine maintenance schedule. The screen lists the part description, quantity per module and part numbers for the 7.5 and 10Hp systems (Fig E-9). To return to the "Service Screen" touch the arrow in the upper left corner.

FOR PARTS CALL: 1-888-4MEDGAS (1-888-463-3427)

DESCRIPTION	7.5 HP	QTY	10 HP	QTY
CRANKCASE OIL	OIL05-001	1*	OIL05-001	1*
INLET FILTER	609823000	1**	609823000	2**
PRE-STAGE SEPARATOR	ELM20-002	1**	ELM20-002	1**
DRYER SEPARATOR	ELM20-001	1**	ELM20-001	1**
DRYER PRE-FILTER	ELM22-001	1**	ELM22-001	1**
DRYER AFTER-FILTER	ELM22-001	1**	ELM22-001	1**
DRYER DESICCANT	DES01-001	5***	DES01-001	7***
COMPRESSOR BELT	BLT01-020	1*	BLT01-018	1*
OIL INDICATOR GAUGE	GAG08-002	2	GAG08-002	2
CARBON FINAL FILTER	ELM24-002	2	ELM24-002	2
OIL ABSORBER MODULE	SEP04-011	1	SEP04-011	1

* SOLD IN 4 LITER CONTAINERS (7.5HP=1.6L & 10HP=2L)
** QUANTITIES SHOWN ARE FOR ONE COMPRESSOR MODULE
***DESICCANT IS SOLD IN 6 POUND BAGS

Fig E-9. Service Parts Screen

E.3.7 "Modify Service Intervals" Button

The "Service Interval" screen lists the time interval for routine maintenance for each system. The time intervals are pre-programmed into the HMI at the factory and are used to trigger the "Service Due" indicator on the main control screen (Fig E-3). The service intervals can be changed by BeaconMedæs service personnel only. To return to the "Service Screen" (Fig E-6) touch the arrow in the upper left corner.

SERVICE INTERVAL SCREEN

LOG-IN

CHANGE CRANKCASE OIL:	1000	HOURS
REPLACE INLET FILTER:	360	DAYS
REPLACE DRYER FILTERS:	360	DAYS
INSPECT/ TENSION BELT:	90	DAYS
GREASE MOTOR BEARINGS:	180	DAYS
REPLACE DRYER DESICCANT:	720	DAYS
INSPECT OIL INDICATOR:	90	DAYS
REPLACE CARBON FILTER:	360	DAYS
CALIBRATE DP SENSOR:	360	DAYS
REPLACE OIL ABSORBER:	720	DAYS
TEST DRAIN VALVES:	360	DAYS
INSPECT PISTON RINGS:	720	DAYS

Fig E-10. Service Interval Screen

Appendix E: HMI Controller

E.4 "Trouble Shooting" Button

The "Trouble Shooting" screen is designed to help the operator diagnose problems with the system. Each button corresponds to an alarm button on the main panel. By touching one of the buttons the operator can view a trouble shooting list for the listed alarm conditions (Fig E-11 and E-12).

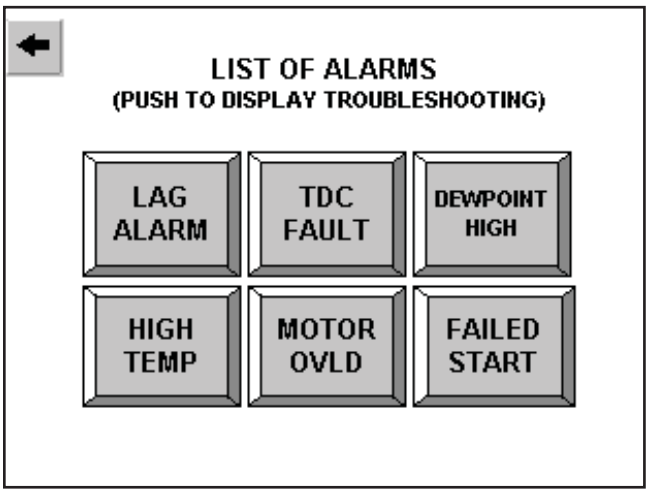

Fig E-11. List of Alarms Screen

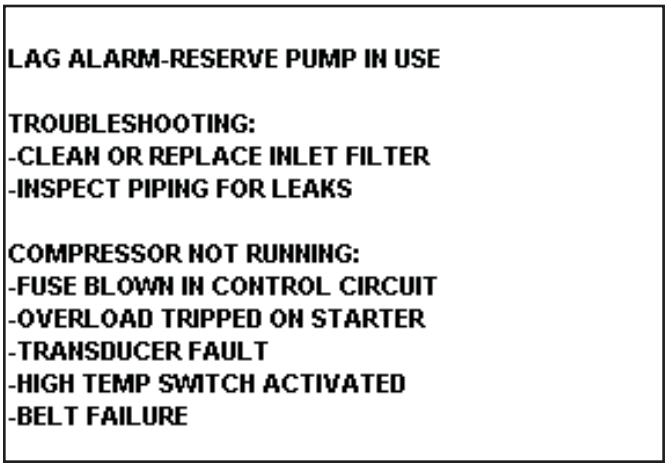

Fig E-12. Lag Alarm Trouble Shooting Screen

To close the Trouble Shooting Screen touch the "X" in the upper right corner of the screen, the display will default back to the "List of Alarms" screen. Touch the arrow in the upper left corner of "List of Alarms" screen to return to the Menu Screen (Fig E-3).

E.5 "Trend Dewpoint" Button

The "Trend Dewpoint" screen allows the operator to view graphically the dew point levels over 4 different time spans.

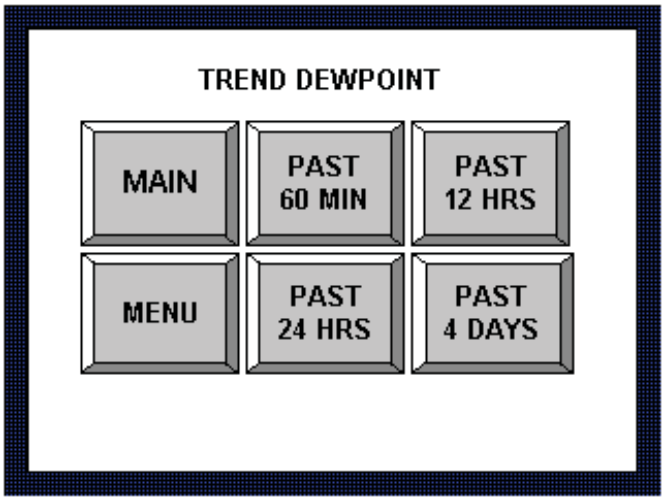

Fig E-13. Trend Dewpoint Screen

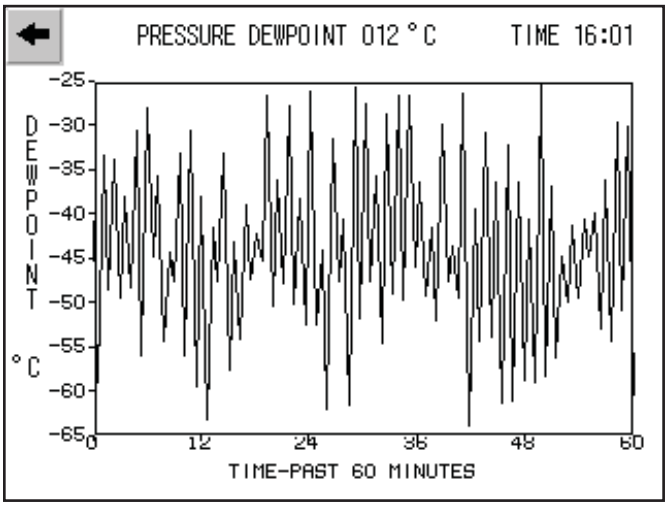

Fig E-14. 60 Minute Trend Dewpoint Screen

To return to the "Trend Dewpoint" screen touch the arrow in the upper left corner.

Appendix E: HMI Controller

E.6 "Trend System Pressure" Button

The "Trend System Pressure" screen allows the operator to view graphically the system pressure levels in the air receiver over 4 different time spans.

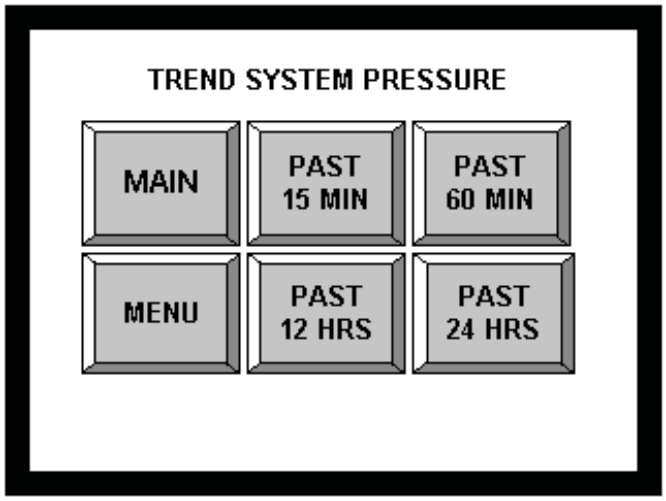

Fig E-15. Trend System Pressure Screen

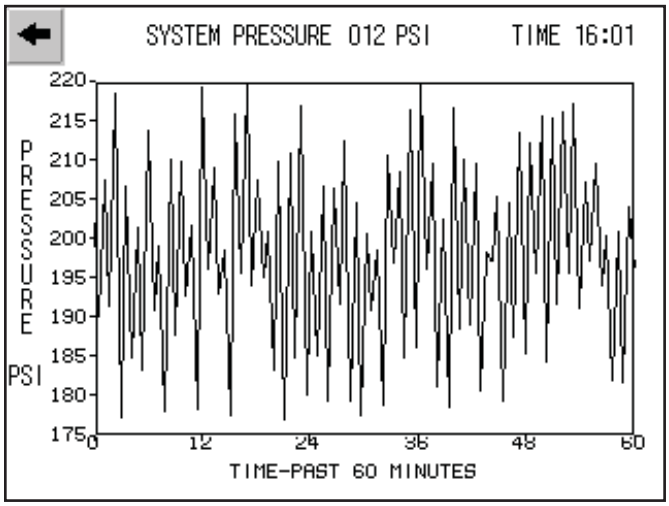

Fig E-16. Trend System Pressure Screen

To return to the "Trend System Pressure" screen touch the arrow in the upper left corner.

E.7 "System Info" Button

The "System Info" button displays all the system information required when scheduling maintenance or purchasing spare parts from BeaconMedæs. The information includes model number, serial number, horse-power, system voltage and unit start up date (Fig E-17). This information will be programmed into the HMI at startup by a BeaconMedæs authorized technician. To return to the "Menu Screen" touch the arrow in the upper left corner.

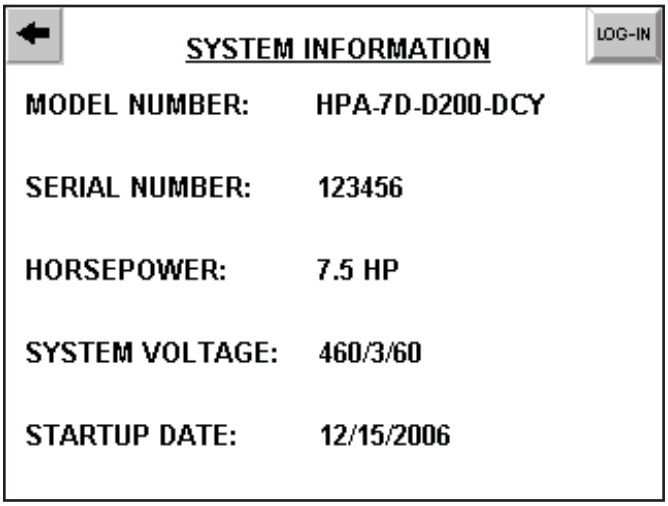

Fig E-17. System Information Screen

Appendix E: HMI Controller

E.8 HMI Maintenance and Spare Parts

The HMI battery should be replaced every 4 years. The battery backs up clock data, alarm history and recipe data. The battery is pre-installed at the factory prior to shipping to the customer.

E.8.1 Battery

Part No.	Contents
BAT01-001	Battery backup of clock data and alarm history

E.8.2 Battery Specifications

Item	Specifications
Type	Magnesium manganese dioxide lithium primary battery
Initial Voltage	3.0V
Storage Life	Approx. 5 years (operating ambient temperature of 25°C)
Application	For backup of clock data and alarm history

E.8.3 Battery Replacement Procedure

1. Turn off power to HMI.
2. Open the back cover of the HMI.
3. Remove the old battery from the holder.
4. Disconnect the old battery connector and insert the new battery connector within 30 seconds. Failure to replace in time allotted will cause clock to reset. Contact BeaconMedæs Service for assistance 1-888-4MEDGAS, option 4.
5. Insert the new battery into the holder and close the back cover.
6. Turn the HMI power on.

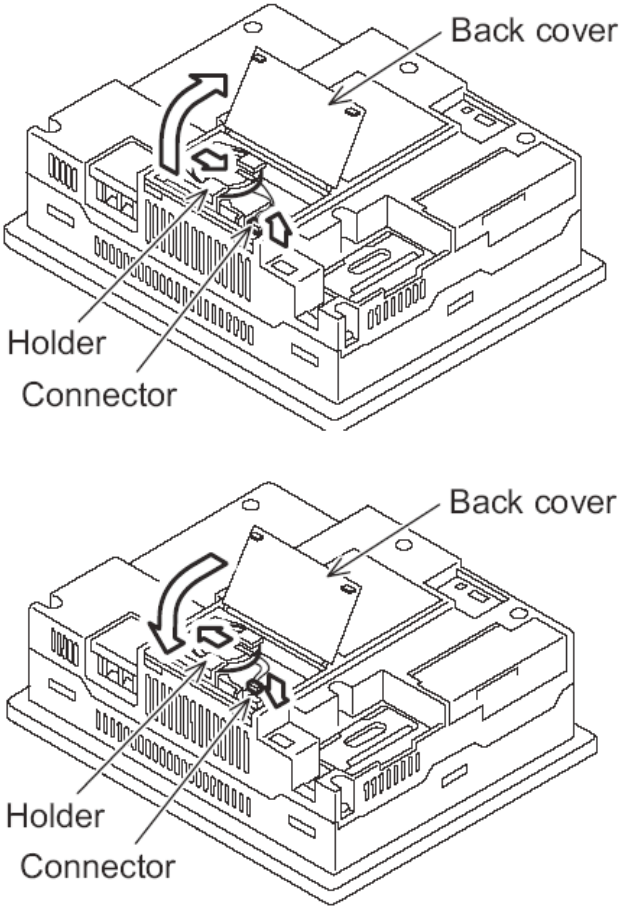

Fig E-18. Battery Replacement

E.8.4 HMI CompactFlash (CF) Memory Card Installation

A CF card can be used to download the alarm history from the HMI (See Section E.10) allowing the operator to transfer this information to a standard PC.

Part No.	Contents
CFC01-001	CompactFlash (CF) Memory Card, 256MB

Appendix E: HMI Controller

1. Set the CF card access switch on the back of the HMI to "OFF", the CF card can be installed even with the HMI power on.

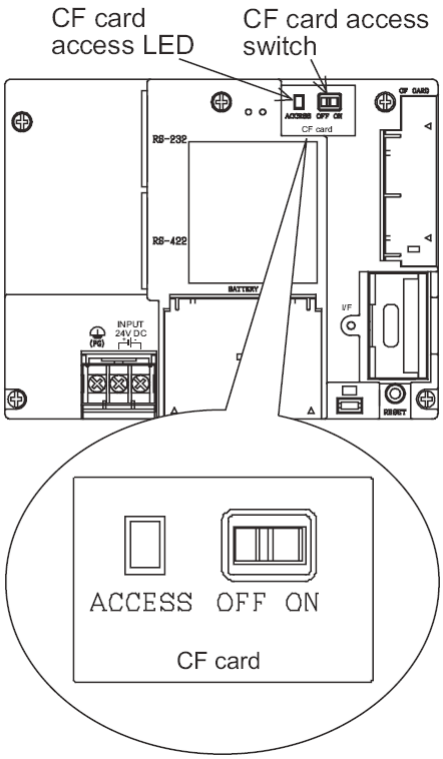

Fig E-19. CF Card Access

2. To install the CF card to the HMI, insert the CF card into the CF interface with its front side out. Push in the CF card until the card eject button snaps.

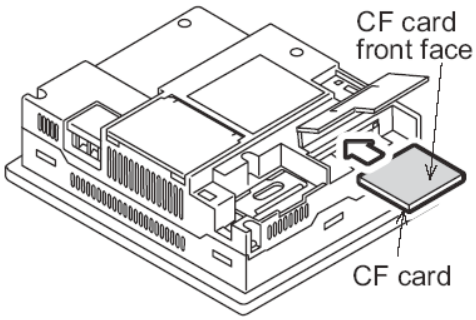

Fig E-20. CF Card Installation

3. Turn the CF card access switch on. The card can now be used.

E.8.5 HMI CompactFlash (CF) Memory Card Removal

1. Set the access switch on the HMI to "OFF". See Fig E-19.

2. Push in the CF card eject button on the HMI to eject the card. Then remove the card from the HMI.

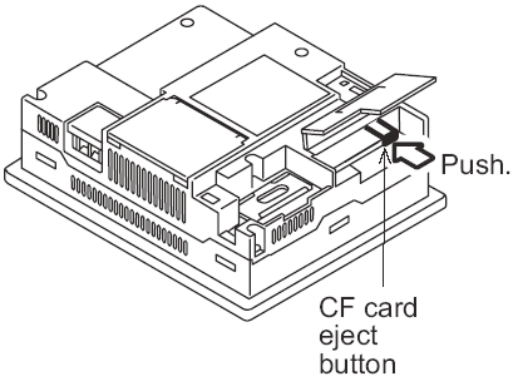

Fig E-21. CF Card Eject

WARNING:

While the CF card access LED is on, do not install/remove the CF card or turn off the power to the HMI. To do so may cause data corruption or malfunction. When ejecting the CF card, support it by hand since it may pop out. Failure to do so may cause the card to fall and damage the card.

E.9 HMI Cleaning Method

To clean the HMI, wipe the surface of the screen with a soft cloth using neutral detergents. Do Not use chemicals such as thinner, organic solvents and strong acids, since they may cause the protective sheet to be deformed or the dissolvable paint on the surface to peel off. In addition, do not use spray solvents since they may cause the electrical failure of the HMI and peripheral devices.

Appendix E: HMI Controller

E.10 Writing Alarm History to a CF Card

Before saving the alarm history to a CF Card see section E.8.4, HMI CompactFlash (CF) Memory Card Installation for the proper procedure of installing and removing the CF Card. To write the alarm history to a CF card you must first navigate through the HMI screens to the history screen (See section E.3.3.). Once in the "History" screen select "SAVE" in the lower right corner to open the "Program/Data Control" screen (Fig E-22).

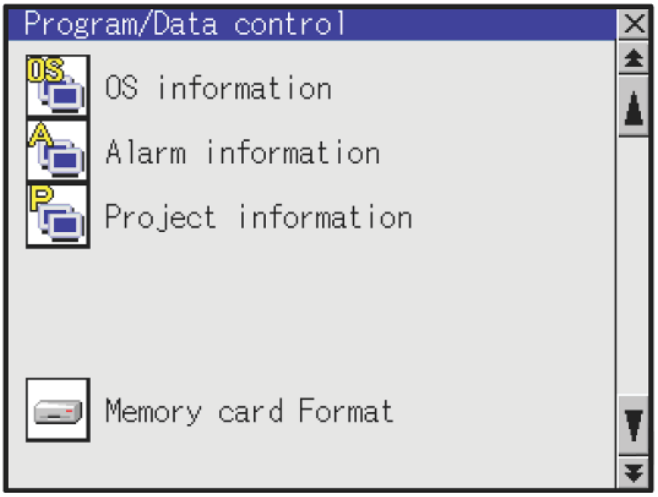

Fig E-22. Program/Data Control Screen

Select "Alarm Information" in Program/Data Control Screen (Fig E-22) to open the "Program/Data Alarm Information" screen (Fig E-23).

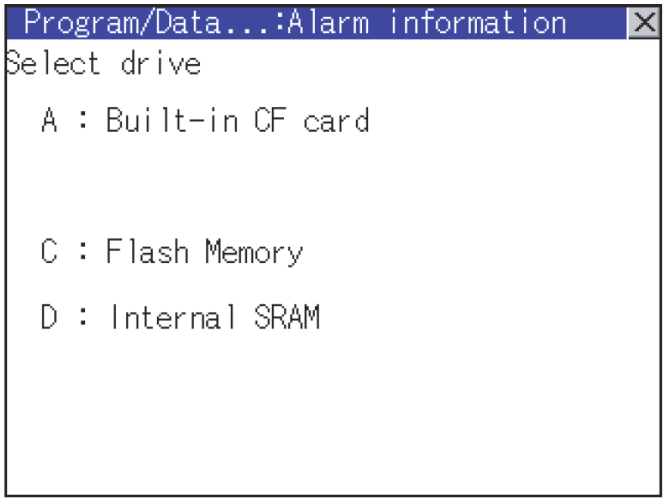

Fig E-23. Program/Data Alarm Information Screen

Select "D: Internal SRAM" in Program/Data Alarm Information screen (Fig E-23) to open the "Program/Data Project Selection" screen (Fig E-24).

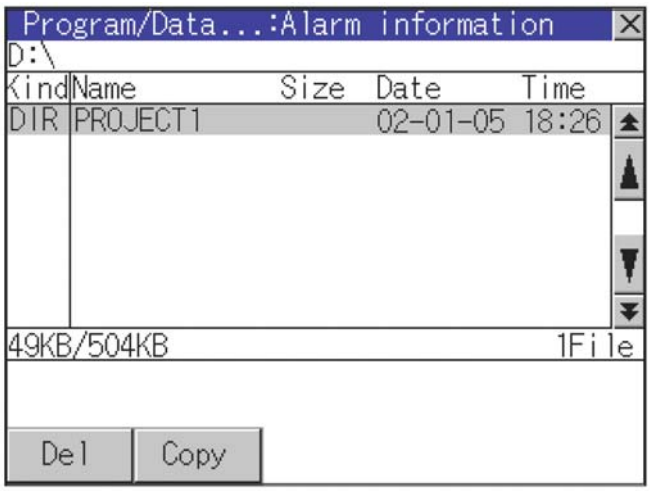

Fig E-24. Program/Data Project Selection Screen

Select "PROJECT 1" by touching it on the screen to open the alarm history folder for the unit (Fig E-24).

Appendix E: HMI Controller

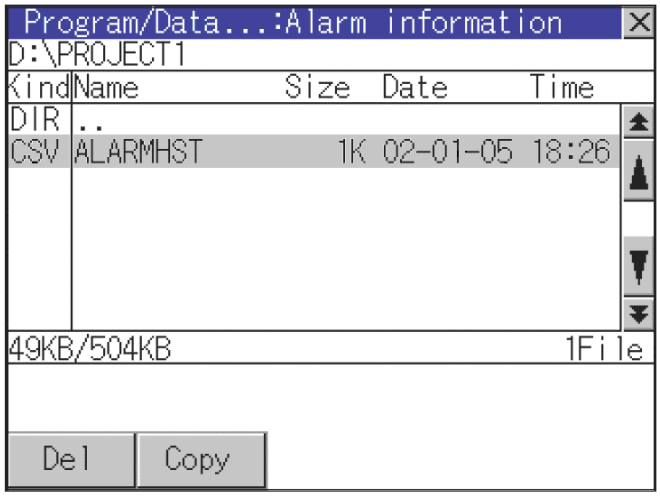

Fig E-25. Program/Data Alarm History File Selection Screen

Select "ALARMHST" by touching it on the screen. File will become highlighted when selected. Press "COPY" (Fig E-25).

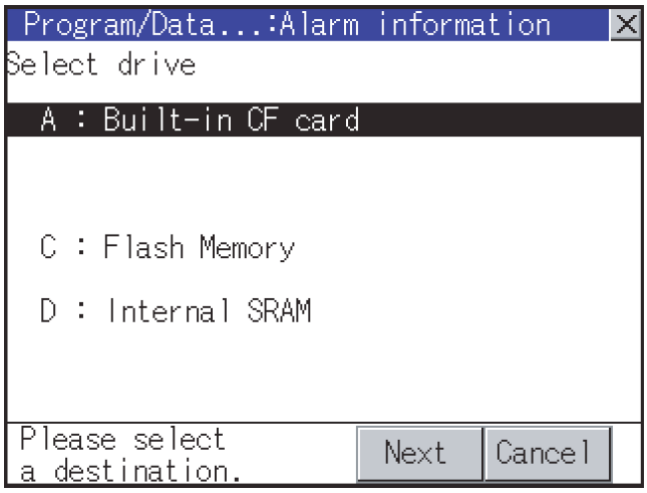

Fig E-26. Program/Data Destination Selection Screen

Next, a destination for the file you're copying needs to be selected. Select "A : Built-in CF card" by touching it on the screen (Fig E-26). File will become highlighted when selected. Press "Next" to continue to the next screen.

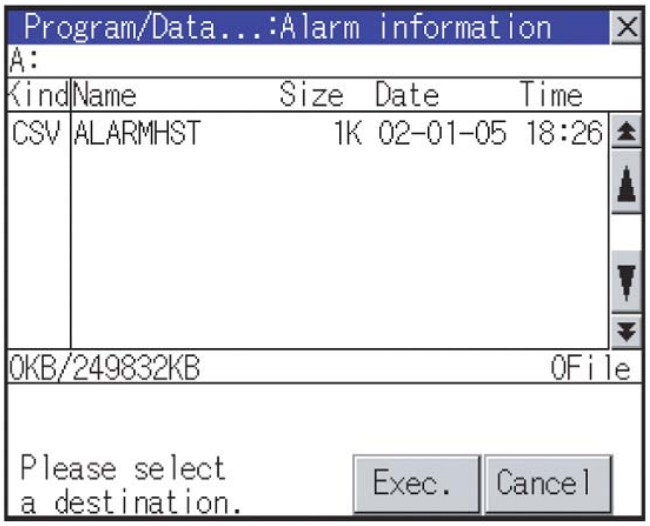

Fig E-27. Program/Data Folder selection Screen

The file selected to be copied will be displayed on the screen (Fig E-27). Press "Exec." A confirmation screen will be displayed for the operator to confirm copying the file to the CF Card (Fig E-28).

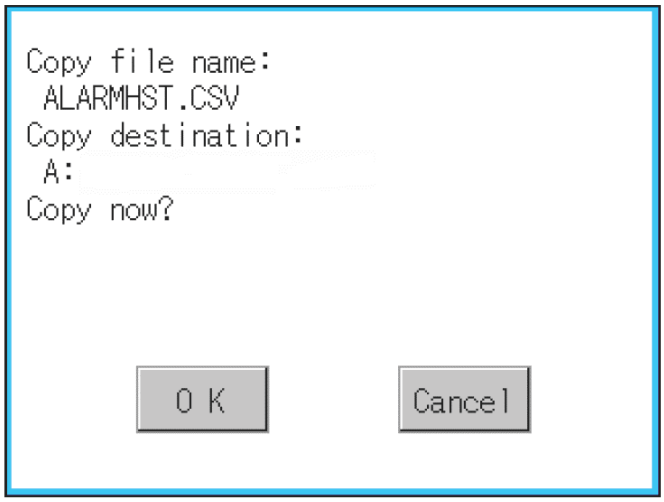

Fig E-28. Copy File Screen

Select "OK" to start copying. When the copy is completed a "Copy is Completed" window will appear on the screen (Fig E-30).

Appendix E: HMI Controller

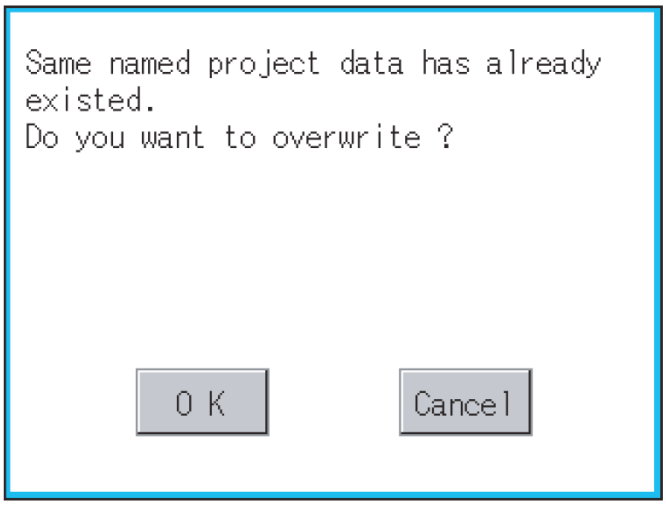

Fig E-29. Overwrite Existing File Screen

If there is a file with the same name as the one being copied in the destination folder (CF Card), the above message will appear on the screen (Fig E-29). Selecting "OK" will overwrite the file on the CF Card. When the copy is completed, a "Copy is Completed" window will appear on the screen (Fig E-30).

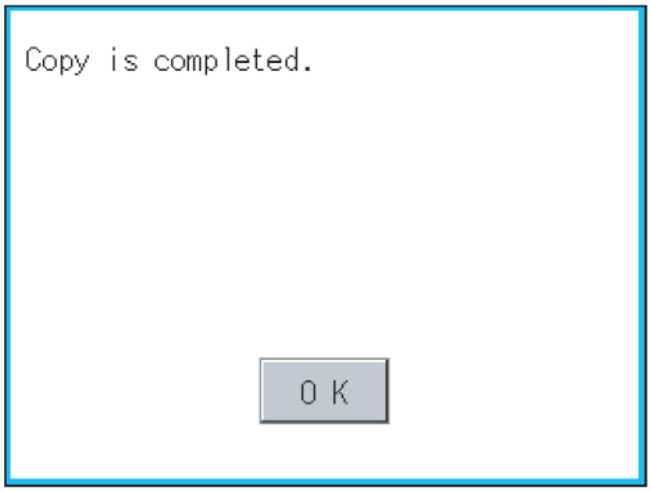

Fig E-30. Copy Completed Screen

Select "OK", the window will close and default back to the "Program/Data Alarm History File Selection Screen (Fig E25). Select "X" twice in the upper right corner to scroll back to the Main Screen.

- To remove the CF Card from the HMI, refer to Section E.8.5 Compact Flash (CF) Memory Card Removal.
- To download the Alarm History from a CF Card onto a PC see Section E.11 Downloading CF Card to Personal Computer.

E.11 Downloading CF Card to Personal Computer

The following instructions are for downloading the Alarm History file from a CF Card to a MS Excel® spreadsheet on a personal computer.

Part No.	Contents
CFC01-002	CompactFlash (CF) Memory Card Reader/Writer USB 2.0

Connect the USB cable from the CompactFlash card reader to a PC, and insert the CF Card into the reader.

On the PC open up a new Excel spread sheet. In the new spread sheet go to the "DATA" pull down menu, go to "Import External Data" and then select "Import Data" (Fig E-31).

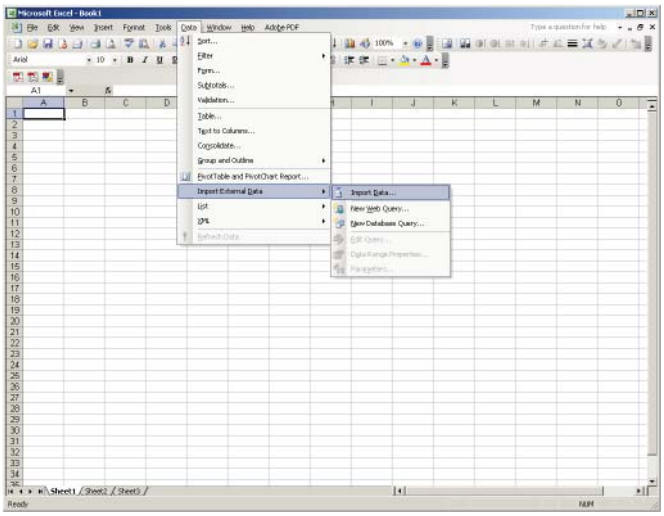

Fig E-31. Importing External Data – Excel Spreadsheet

Appendix E: HMI Controller

A "Select Data Source" window will open (Fig E-32). In this window select "My Computer" in the left hand selection window and then highlight "Removable Disk (E:)", the drive you are copying the file from. Then select "Open" in the lower right corner of the window.

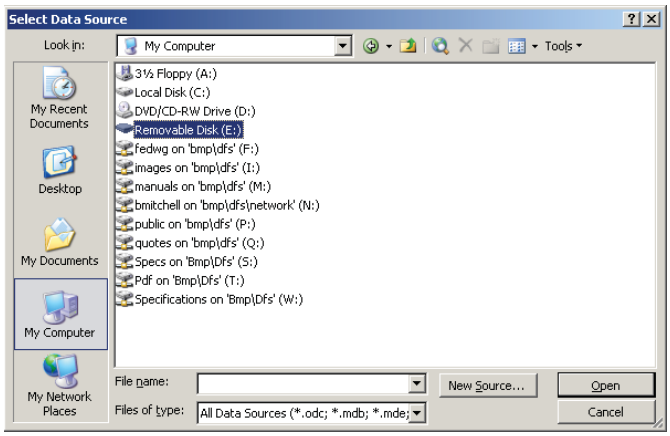

Fig E-32. Select Data Source Screen

Next, highlight the file "ALARMHST.CSV" and select "Open" in the lower right hand corner (Fig E-33). This will open a "Text Import Wizard" window (Fig E-34).

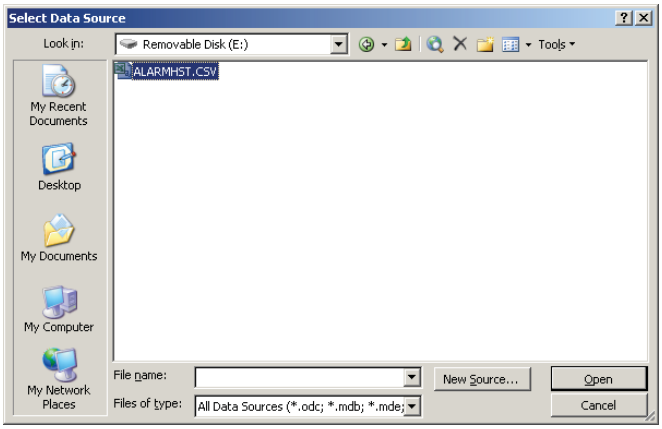

Fig E-33. Select File to Import Screen

In the "Text Import Wizard – Step 1 of 3" window select the file type "Delimited" and select "Next" in the lower right hand corner (Fig E-34).

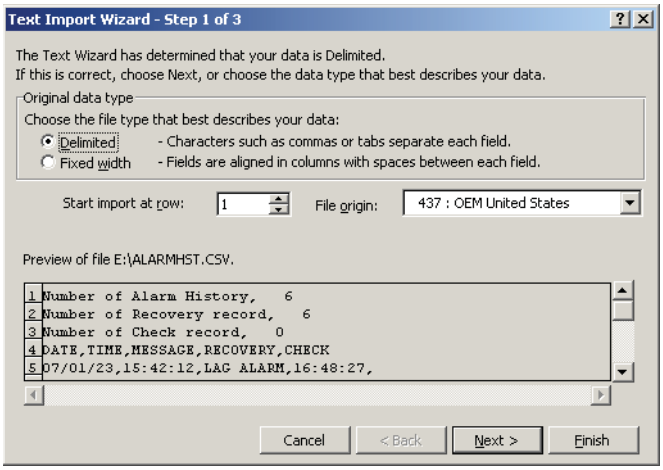

Fig E-34. Text import Wizard – Step 1 of 3 Screen

Step 2. In the "Delimiter" section, un-select "Tab" and select "Comma" and then select "Next" in the lower right hand corner (Fig E-35).

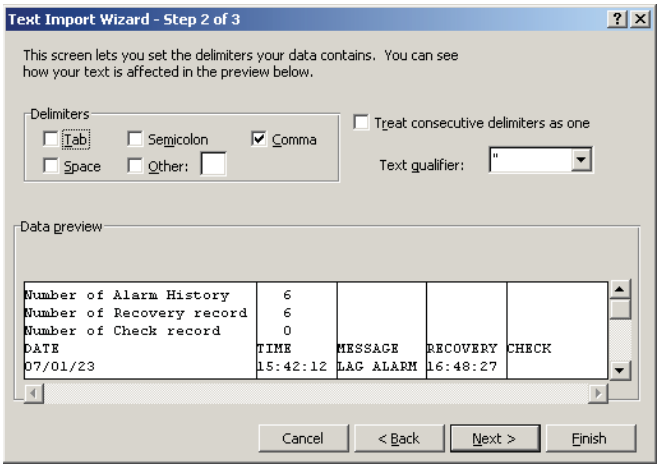

Fig E-35. Text Import Wizard - Step 2 of 3 Screen

Step 3. Change the "Column data format" to "Date" and select "YMD" in the selection window next to "Date". Then select "Finish" (Fig E-36).

Appendix E: HMI Controller

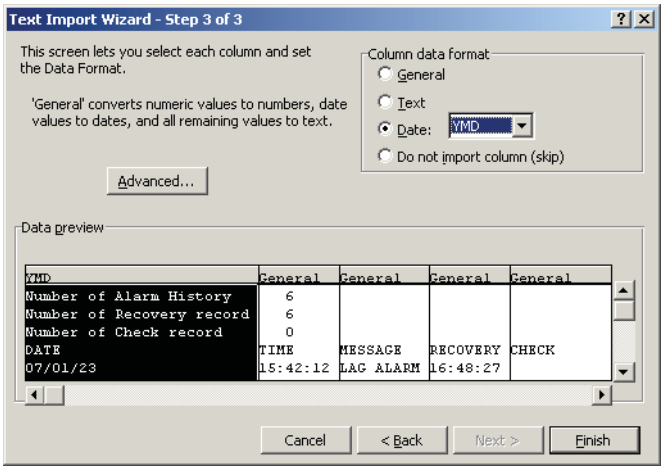

Fig E-36. Text import Wizard – Step 3 of 3 Screen

Next, the "Import Data" window will open. Select "Existing worksheet" and make sure cell "A1" is highlighted on the Excel spreadsheet (Fig E-37).

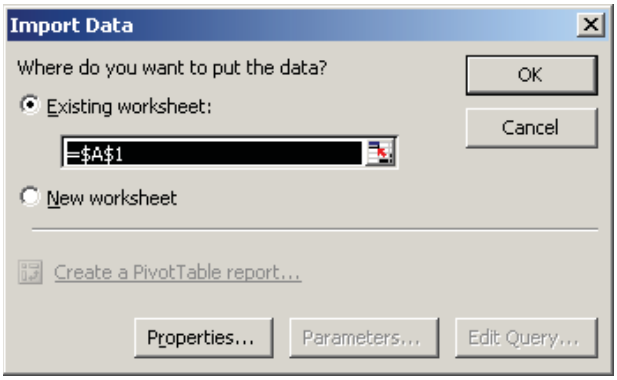

Fig E-37. Import Data Screen

Select "OK" and the information will be downloaded into the Excel spreadsheet. Save the file to the appropriate drive on your PC (Fig E-38).

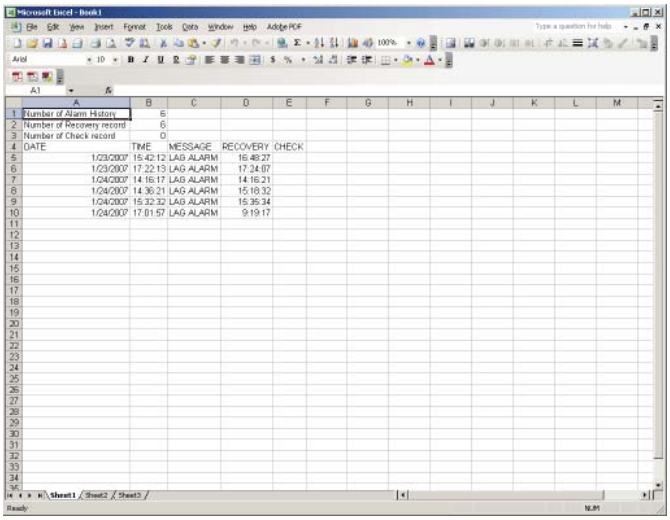

Fig E-38. Downloaded Data on MS Excel Spreadsheet

BeaconMedaes®

1800 Overview Drive Rock Hill, SC 29730
(888) 4-MEDGAS (888) 463-3427
Fax (803) 817-5750
www.beaconmedaes.com