NOTES:

1. ALLOW A MINIMUM CLEARANCE OF (2) FEET ON ALL SIDES OF THE COMPRESSOR PACKAGE FOR PROPER VENTILATION AND MAINTENANCE
2. SYSTEMS WITH OSHPOD PRE-APPROVED SEISMICALLY RESTRAINED ISOLATERS ARE AVAILABLE, CONSULT FACTORY.
3. BASEFRAMES ARE SHIPPED TOGETHER & CAN BE UNBOLTED FOR PASSAGE THROUGH A STANDARD DOORWAY.

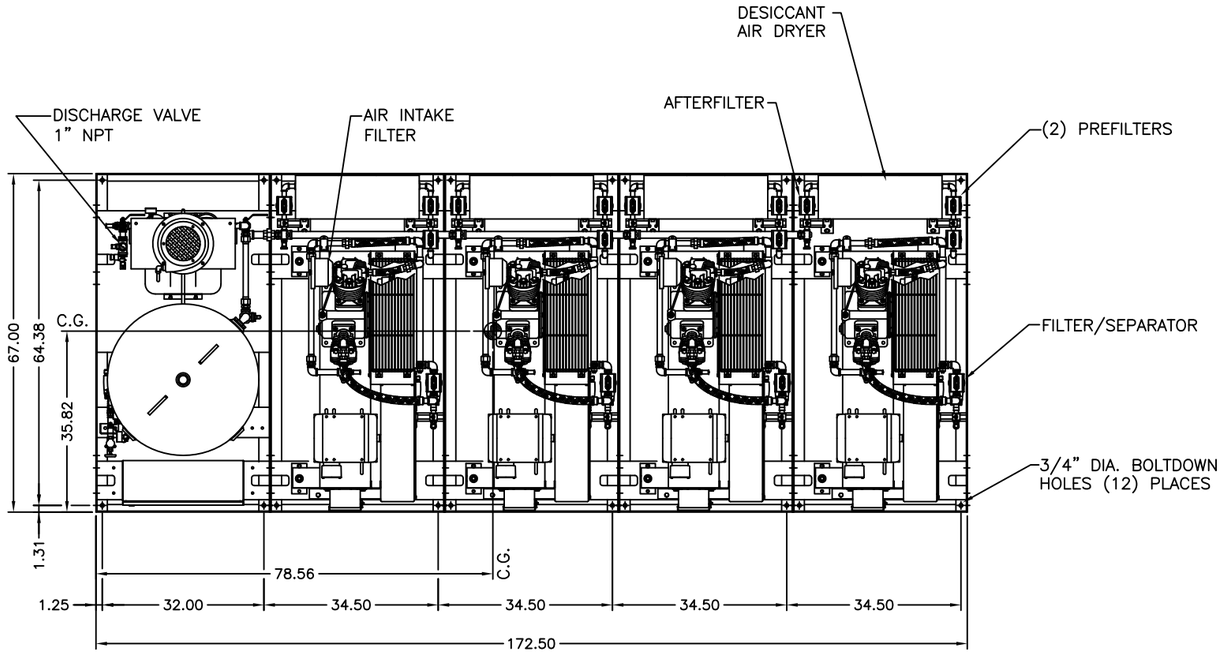

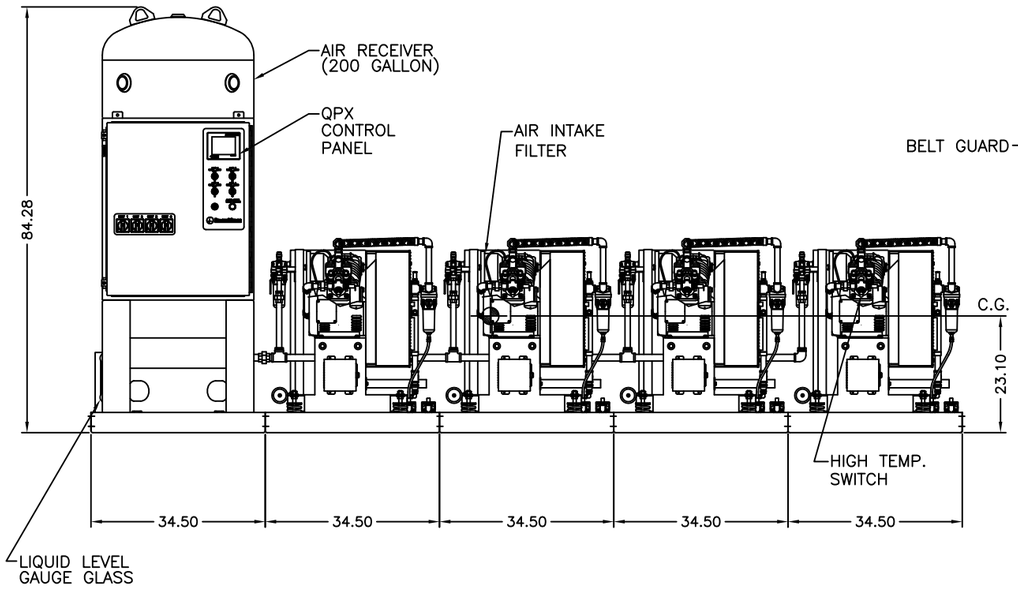

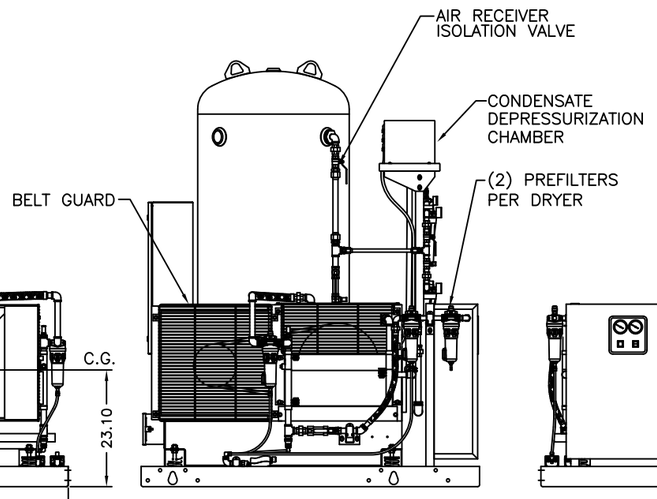

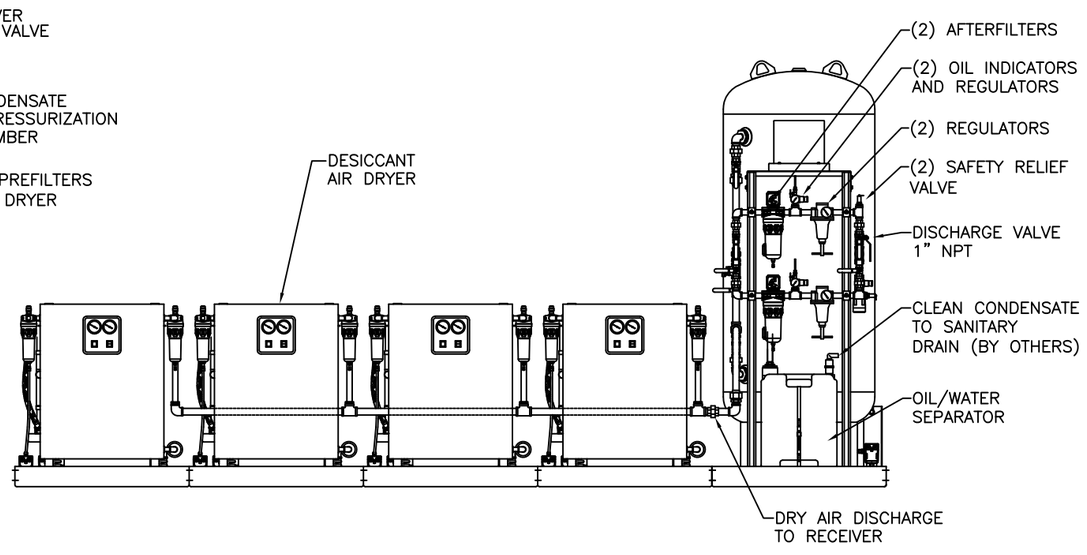

MODEL NO.: HPA-7Q-D200			
CAPACITY @ 200 PSIG SCFM		NOISE LEVEL dB(A)*	WEIGHT (LBS)
PUMP	SYSTEM		
16.5	49.5	81	4397

* ALL NOISE LEVELS ARE SHOWN IN dB(A) AND REFLECT THREE PUMPS IN OPERATION.

7.5HP W/200 GALLON TANK SHOWN

BEACONMEDÆS

TITLE:
QPX INSTRUMENT AIR 7.5HP
SPC BASE MOUNT SYSTEM

DRAWN BY: BJM	DATE: 6/14/06	This drawing and the information contained thereon remain the property of Beaconmedaes and may not be used for other than the purpose for which it is loaned without the expressed written permission from Beaconmedaes Engineering.
CHECKED BY:	DATE:	
REVISED BY: GTM	DATE: 07/09/14	DRAWING NO. DIA 24 854
SCALE: 1:15 D		REV. C